User Manual

SPARK CUBE

Manufactured by:

HYBRID POWER SOLUTIONS

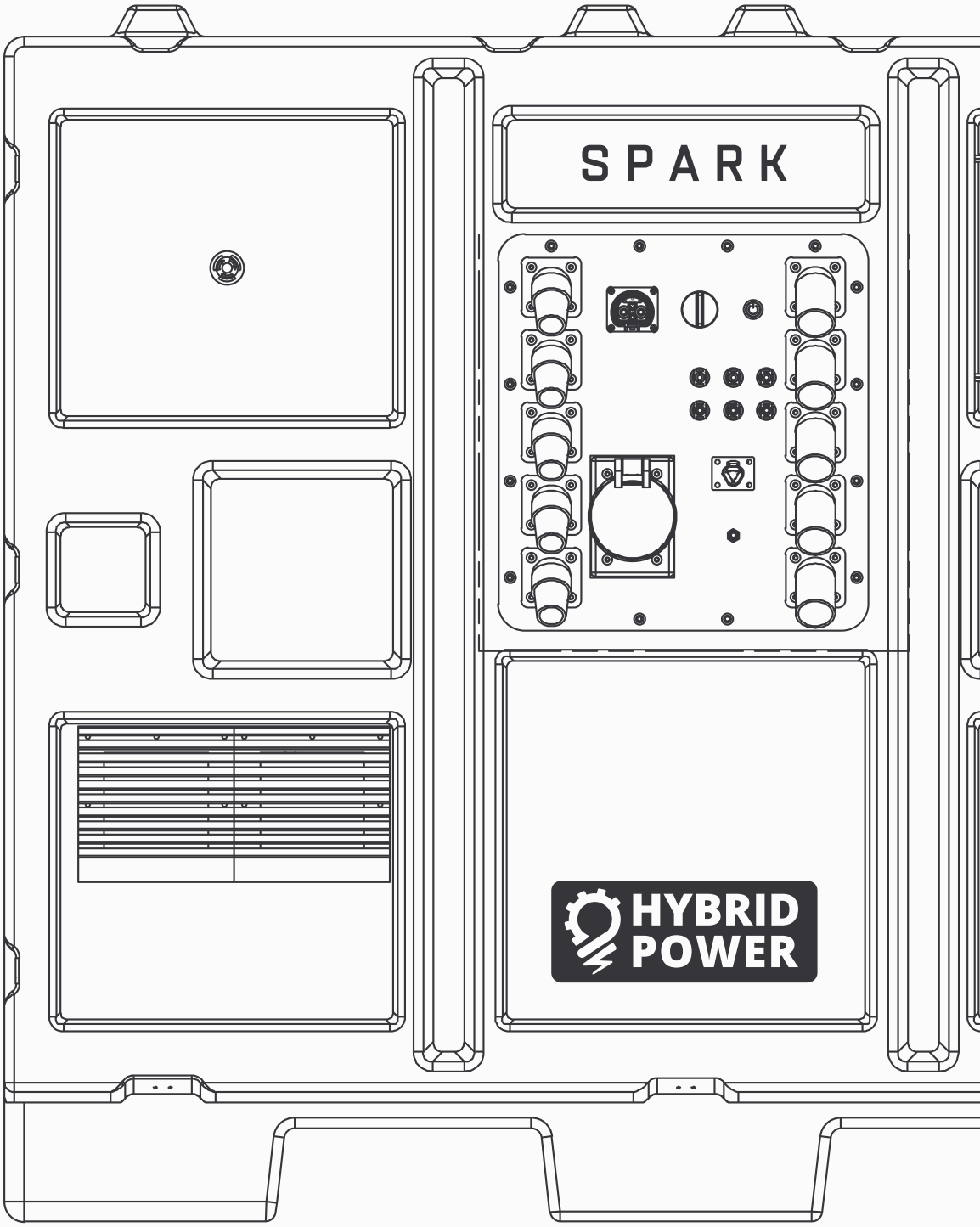

hybridps.ca

SPARK

12kW | 24kW CUBE

HYBRID POWER SOLUTIONS

Manual
INDEX

Content	Page
Introduction	06
Safety Information	08
Configuration	23
Operation	40
Monitor System	60
Spark Cube Wiring Guide	66
Troubleshoot	70
Lux Power Monitor System User Interface	73
Warranty	83

INTRODUCTION

Section 1

1.1. Product Description

Thank you for choosing this portable power supply from Hybrid Power Solutions (HPS). We hope you enjoy and use the Spark Cube to its full potential.

Please unpack your Spark Cube carefully and check the delivery for completeness and obvious damage. In case of damage inform us immediately.

The Spark Cube is delivered to you in a ready to use state with 30% energy (+/-5%). However, please make sure you read through this user manual carefully. If you have further questions regarding the unit, please contact HPS.

Our Batt Packs are assembled in Canada with imported and domestic components.

1.2. Contact Details

Hybrid Power Solutions Inc.
288 Judson St Unit #5,
Toronto, ON M8Z 5T6
Canada

Technical Support: +1 (289) 633-5055
Sales: +1 (866) 549-2743
E-Mail: Info@hybridps.ca
Website: hybridps.ca

SAFETY INFORMATION

Section 2

2.1. General Safety Instructions

Before operating the Spark Cube, carefully read and fully understand the instructions including all the cautions and safety notices shown on this manual. Following all instructions for proper operation and troubleshooting will reduce the risk of personal injury, death and/or property damage.

These instructions are not intended as a complete list of all details for operating and troubleshooting, although reading and following them will aim to keep you safe. If you have any questions or concerns about procedures or safety that are not covered by these instructions, do not hesitate to **contact HPS**.

2.1. Safety Notices

This manual includes the following formats for safety notices. These notices appear at the beginning of sections or are integrated within the operating instructions.

Please make sure to read and adhere to all the notices in this manual.

DANGER

Risk of death!

Indicates a hazardous situation which, if not avoided, will almost certainly result in death or serious injury.

WARNING

Risk of serious injury or death!

Indicates a hazardous situation which, if not avoided, could result in death or serious injury.

CAUTION

Risk of injury or damage to property!

Indicates a hazardous situation which, if not avoided, could result in minor or moderate injury and damage to the unit.

NOTICE

Indicates an important situation which, if not avoided, may seriously impair operations.

2.2. Special Safety Instructions

This manual employs the following symbols to highlight specific hazards.

Symbol	Meaning
	Electrical hazards and electrical shock hazards
	General warning
	Fire hazard
	Heavy objects or equipment
	Corrosive substance
	Battery damage or leakage
	Crush or trapping hazard

2.3. Operator Responsibility

Treat the Spark Cube system with general care, by closing the output plugs and input plugs and turning the system off when not in use.

If an unfamiliar sound or smell is noted to come from the unit, please turn off the unit and notify HPS immediately. Leave in a well-ventilated area, away from flammable sources.

CAUTION

Risk of injury or damage to property!

- Do not put fingers and/or any other object into the units plugs.
- Never open the unit case.
- Do not expose to temperatures outside the range of -30°C to 50°C.
- To minimize any adverse effects on battery performance it is recommended that the system be kept at room temperature (20°C +/- 5°C). Low or elevated temperatures can result in shortened cell life.
- Keep out of reach of children.

NOTICE

Although the Spark Cube does have circuit interruption built into the design, we highly recommend the use of a GFCI (Ground fault protection) device or devices downstream of the Spark Cube. In certain conditions this may be required by law for use of the product. Please ensure all conformance to local law and regulations.

2.3 Emergency Stop Button

CAUTION

Risk of damage!

The e-stop is for emergencies only, improper use will damage the system.

The Spark Cube can be safely stopped by pressing the emergency stop button. Once the button is pressed, the Spark Cube can only be restarted after releasing the emergency stop button and resetting the system.

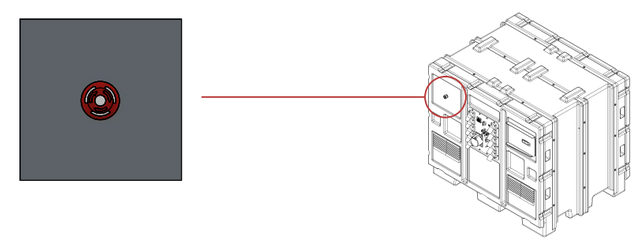

2.4 Safety Labels

WARNING

Risk of injury due to illegible signs!

Any labels or stickers which are found to be illegible are to be replaced immediately.

Safety labels are placed on the Spark Cube to alert you to potential hazards. These labels must not be altered or removed. The following labels are visible when the Spark Cube is in safe working mode or during maintenance.

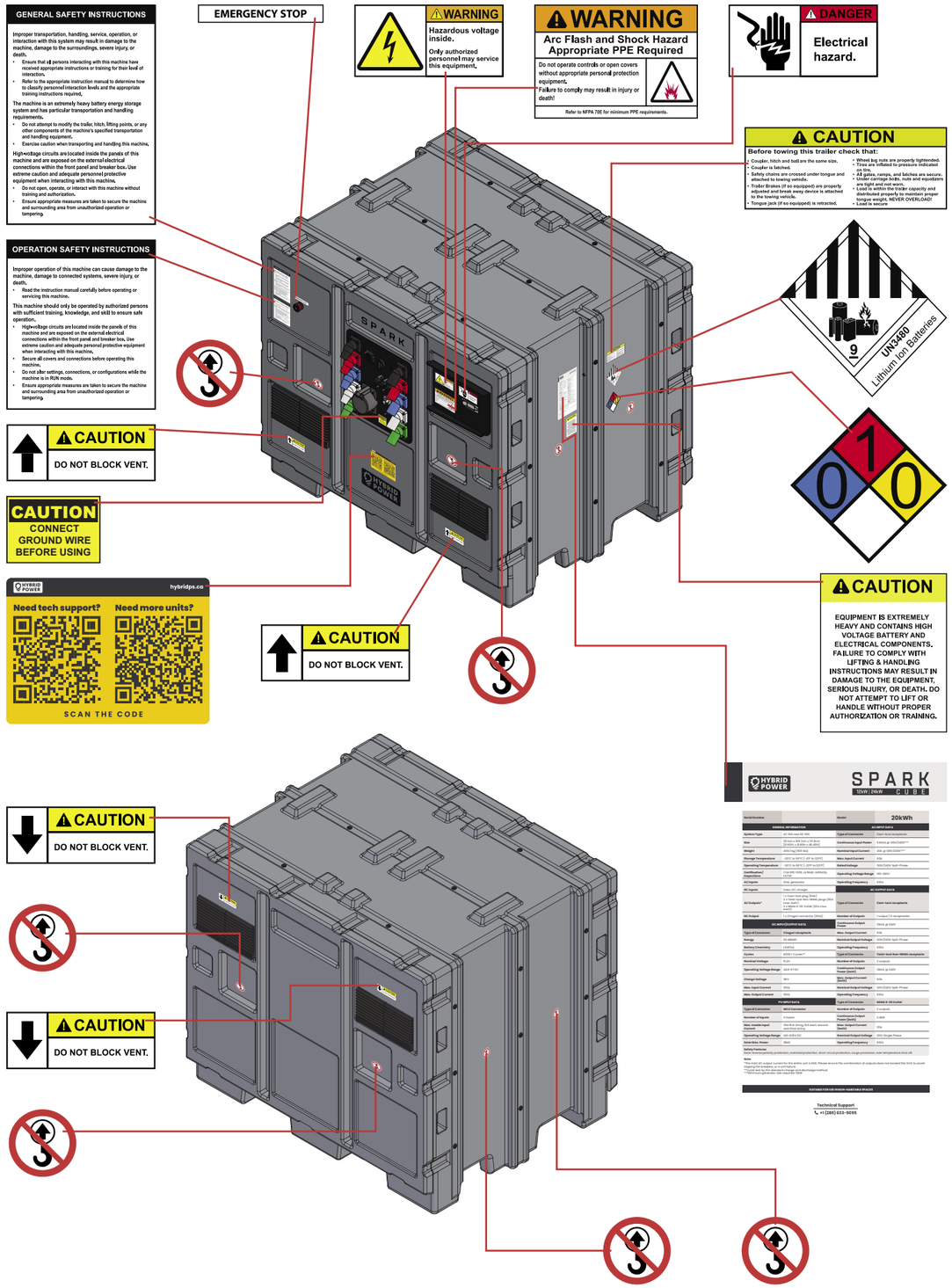

2.5. PPE Requirements

WARNING

Use personal protective equipment (PPE) as required. Do not eat, drink or smoke when using the Batt Pack. Ensure adequate ventilation at all times.

HPS recommends using high voltage gloves class 00 for operators who have been trained in NFPA70E.

Consider the following when using PPE:

- **Eye and face protection:** Wear safety glasses that meet ANSI Z87.1 requirements. Follow local on-site health and safety guidelines.
- **Safety shoes:** Wear safety shoes that meet ASTM F2413 requirements.
- **Trapped hair or loose clothing:** Use caution to prevent hair from being caught by any moving parts. Secure all loose clothing.

2.6. Safe Operating Area and Clearance

When operating the unit you should allow at least 5 feet (1.5 m) around the unit. This is to provide adequate ventilation and access to the connection panels.

If space is limited around the unit's operating area, make sure there is enough space to allow the unit to be positioned for hitching to a towing vehicle.

CAUTION

Do not position any high-temperature devices or exhausts, for example diesel generators or air handlers, closer than 10 feet (3.0 m) to the unit.

The air intake vents on the Batt Pack must not be blocked during unit operation.

To prevent the Batt Pack from rolling backward or forward, secure the unit in place with wheel chocks.

- Deployed units shall be separated by a minimum of 10 ft from the following exposures: Public ways, buildings, stored combustible materials, hazardous materials, high-piled storage, combustible vegetation, other combustible growth, and other exposure hazards.
- Deployed Batt Packs shall be located at least 10 ft away from any means of egress. The fire code official may authorize a reduced separation distance if large-scale fire testing is provided, which demonstrates that a fire involving the unit won't adversely affect occupant egress.

2.7. Residual Risks

The Batt Pack includes the latest technology and safety features. However, some residual risks still require your attention. The following section outlines these residual risks and the corresponding safety measures.

2.7.1. Pinch Points

WARNING

Risk of crushing or trapped hands!

Crushing and pinching hazard from moving parts around the main wheels and when attaching the trailer hitch to a vehicle.

There is also a risk of pinching when operating the rear panels of the unit.

2.7.2. Electrical Current

DANGER

Risk of death!

Do not use the Spark Cube if it is exposed to any of the following:

- Flooding.
- High-impact events, for example vehicular accidents or drop events.
- Prolonged exposure to environments outside of the specified operating and storage conditions.

Return the Spark Cube to Hybrid Power Solutions for full checks and servicing.

DANGER

Risk of death!

Do not use the Spark Cube if exposed to lightning or high electrical discharge without first consulting a qualified electrician to determine if proper mitigations such as lightning arresters and proper grounding have been considered and implemented to protect the Batt Pack and load(s).

WARNING

Risk of electrical shock!

When not connected to earth ground through the ground block, the Spark Cube must be isolated from earth ground.

WARNING

Risk of electrical shock!

Do not expose the electronics of the Spark Cube or the lithium-ion battery.

When charging the Spark Cube through the 48V DC input, make sure you use a battery charger suitable for lithium-iron phosphate (LFP) batteries.

When operating cam-lock and twist-lock cables, make sure the unit is not running.

Do not touch the sockets when the unit is running.

WARNING

Risk of electrical shock!

- Always assume that there is stored energy unless it has been verified that there is none.
- Always assume that there is high voltage (HV) present unless it has been verified that there is none.
- Always measure HV components to confirm that there is no HV before starting any repairs.
- Never touch the Spark Cube output cam locks during operation.
- Never insert any objects into the Spark Cube's output receptacles during operation.
- Never allow power cords or cables to lay in water.
- Never stand in water while AC power from the unit is being transferred to a load.

It is crucial to follow these safety guidelines to ensure a safe working environment when operating electrical equipment.

WARNING

Risk of electrical shock!

In the event of electrical shock or electrocution

- De-energize the system and verify the system is de-energized with a digital multimeter.
- DO NOT touch an injured person as you may also be at risk of electric shock or electrocution.
- Use an insulated rescue hook to move the injured person away from the electrical hazard.
- Immediately call 911 and the emergency response team (ERT).
- If you are trained and required, perform CPR and/or use an AED if necessary.

2.7.3. Operating Environment

CAUTION

Risk of injury!

- Do not operate the unit in high dust conditions.
- Do not operate or store the unit at temperatures less than -25°C (-13°F) or more than 40°C (104°F).
- Always make sure the unit is secure and on level ground before use.
- Use wheel chocks and hitch jack to make sure the trailer is level and secure during operation.
- Do not stand on the trailer or on top of the unit.

2.7.4. Network and Data Security

CAUTION

Risk of data loss or misconfiguration

Do not integrate the Spark Cube with any third-party software or other sub-systems unless expressly consented by Hybrid Power Solutions.

Hybrid Power Solutions can remotely monitor the unit status and run diagnostics.

2.7.5. Heat and Flammable

WARNING

Risk of Fire or Flammable Materials!

The unit contains materials with a flashpoint at or above 93.3°C (200°F). Thermal runaway is a possible risk when using lithium-ion batteries.

2.7.6. Trip Hazard

WARNING

Risk of injury from trips or falls!

There is a risk of tripping on cables. Make sure to safely guide any cables and connectors in the unit operating area.

2.7.7. Heavy Loads

WARNING

Risk of injury from lifting heavy objects!

Due to the large weight of the unit, exercise caution when hitching and moving the unit.

When lifting and mounting the unit, always use correct equipment with appropriate load capacity. The Gross Vehicle Weight Rating (GVWR) of the Unit with the trailer is approximately 2,000kg (4,400lbs).

2.7.8. Unsafe Driving

WARNING

Risk of serious injury or death!

Loss of control while towing the unit can result in death or serious injury.

The following lists the most common reasons for loss of control. Be aware of these causes and take appropriate actions:

- Driving too fast
- Failure to adjust handling while towing
- The trailer is not properly coupled to the hitch
- Incorrect use of the safety chains
- Incorrect use or configuration of the breakaway brake
- Mismatch of trailer and the hitch type used

2.7.9. Water Ingress

WARNING

Risk of serious injury or death!

- Do not remove any panels.
- If a panel is removed, ingress protection is compromised and poses as an electrical hazard.
- Make sure the unit is not operated until the panel has been resealed.
- Do not jet-wash directly onto the panel doors at the rear of the unit or onto the air-vents along the top edges of the unit.
- Do not wash the unit while it is in use or with connectors attached.

2.8. Battery Safety

DANGER

Risk of death!

Only use the batteries for their designated purpose.

Never use a damaged battery. A damaged battery can overheat and create a fire hazard.

Do not expose batteries or the unit to high temperatures or heat-generating sources, for example, fires, or heaters.

Only charge the Spark Cube through the 48V DC Input with an appropriate 51.2V lithium-iron phosphate (LFP) charger.

Do not attempt to remove, replace, or install batteries without express training and consent from Hybrid Power Solutions.

WARNING

Risk of corrosive substances!

If there are any leaks found around the unit, do not touch the leaking fluid. The battery fluids can be corrosive and harmful to skin.

WARNING

Contact with leaked electrolyte!

The constituent battery cells are sealed and leakage should not occur during normal use. Contents of an open (broken) constituent battery cell can cause skin irritation and/or chemical burns.

If materials from a ruptured or otherwise damaged cell or battery contacts skin, immediately wash the affected area with soap and water.

If a chemical burn occurs or if irritation persists, seek medical assistance.

For eye contact, flush with significant amounts of cold water for at least 15 minutes, without rubbing, and seek medical assistance immediately.

WARNING

Inhalation of electrolyte vapors!

If inhalation of electrolyte vapors occurs, move the person into fresh air.

If not breathing, give artificial respiration and seek immediate medical assistance.

WARNING

Vent gas Inhalation!

The constituent battery cells are sealed and venting of cells should not occur during normal use.

If inhalation of vent gasses occurs, move the person into fresh air.

If not breathing, give artificial respiration. Seek immediate medical assistance.

2.8.1. Thermal Runaway

While lithium-iron phosphate (LFP) is widely accepted as one of the safest battery chemistries, there is still a posed risk of thermal runaway.

WARNING

Risk of fire, flammable, and explosive materials!

If the unit is in thermal runaway, the following actions must be taken:

- If possible to do so safely, move the unit to an open area away from flammable material, structures, and people.
- Evacuate the area
- DO NOT attempt to repair.
- Contact local emergency services. Notify them that a lithium-ion battery system may be malfunctioning and is under suspicion of undergoing thermal runaway.

Thermal runaway is a self-reinforcing, uncontrolled increase in temperature within an electronic device, leading to a rapid escalation of heat generation. This phenomenon occurs when the heat produced by the device surpasses its ability to dissipate heat, resulting in a feedback loop where increased temperature further accelerates heat production.

The consequences of thermal runaway can range from reduced device performance and shortened lifespan to severe damage, fire, or explosion.

The Spark Cube has a robust multi-layer protection system that guards against all of these factors, making it a safe and reliable choice for electronic applications.

Several factors can contribute to thermal runaway in electronic devices, including:

- **Over-current or overloading:** When a device is subjected to excessive current or voltage beyond its rated capacity, it can lead to increased heat generation and trigger thermal runaway.
- **Poor heat dissipation:** Inadequate cooling mechanisms or blocked ventilation can prevent effective heat dissipation, causing temperature build-up and potential thermal runaway.
- **Manufacturing defects:** Poorly designed or manufactured components can result in localized hotspots, initiating thermal runaway.
- **Battery malfunctions:** Rechargeable batteries are particularly susceptible to thermal runaway if they are damaged, overcharged, or exposed to extreme temperatures.

2.9. Grounding the Unit

WARNING

Risk of electrical shock!

Only qualified electricians should be in charge of unit grounding. Personnel in charge of unit grounding must know and comply with the local electrical and safety code regulations.

2.10. Towing and Transportation Safety

You can transport the unit between locations by towing it or loading onto a flat-bed or goose-neck trailer.

WARNING

Risk of serious injury or death!

- Before transporting the unit, make sure to secure the unit's trailer to the towing vehicle by using appropriate connections.
- Always use safety chains in addition to the standard pintle hitch and lunette ring connection.
- Make sure the trailer and the towing vehicle are in good operating condition.
- When transporting the unit, abide by local road safety regulations.

WARNING

Risk of serious injury or death!

Do not lift the unit using the trailer D-rings located on the side of trailer.

These D-rings are only to be used for securing the trailer, with the Unit fitted, when it is transported using a flat-bed or goose-neck trailer.

CAUTION

Risk of injury or damage!

Do not use the tongue jack for supporting the unit when transporting the unit on a flat-bed or goose-neck trailer.

When transporting the unit on a flat-bed or goose-neck trailer, make sure you have fitted the supplemental jack stand.

CAUTION

Risk of damage!

Always switch the unit to **OFF** and ensure the Main Breaker is in the **OFF** position before transporting.

Secure all four panels at the back of the unit before transportation.

Make sure the unit is secured on ground level before attaching the trailer.

The unit must be level when towed.

CAUTION

Risk of injury or damage!

- Before towing this unit check the following:
- The pintle hitch and lunette ring are the same size.
- The pintle hitch is latched.
- The safety chains are crossed under the trailer tongue and attached to towing vehicle.
- Trailer brakes are properly adjusted and the break-away device is attached to the towing vehicle.
- The tongue jack is retracted.
- The wheel lug nuts are properly tightened.
- The tires are inflated to the correct pressure.
- All gates, ramps, and latches are secure.
- Any under-carriage bolts, nuts and equalizers are tight and not worn.
- The load is within the trailer capacity and distributed properly to maintain proper tongue weight. NEVER OVERLOAD!
- The load is secure.

2.10.1. Modifying the Trailer

WARNING

Risk of serious injury or death!

Hybrid Power Solutions recommends that you do not modify your trailer.

However, if you do need to make trailer modifications, contact Hybrid Power Solutions. Call +1 (289) 633-5055 or Info@hybridps.ca.

2.10.2. Trailer Accessories

WARNING

Risk of serious injury or death!

It is important to use our trailer accessories as shown.

If your trailer contents or safety decals need to be replaced, contact Hybrid Power Solutions. Call +1 (289) 633-5055 or Info@hybridps.ca.

2.11. Personnel

The owner and their representatives must have undergone the appropriate training before operating the unit and related systems.

Only specialist service personnel employed or personnel authorized by Hybrid Power Solutions can perform service and support work on the unit. Other personnel are not authorized to carry out this work.

2.11.1. Operating Staff

Only qualified personnel can operate the Spark Cube. All persons operating the unit must be qualified and experienced in the following areas:

- Qualified personnel should be familiar with electrical installation methods, such as electrical codes and standards, electrical interconnections, and power conversion systems.
- All persons operating the unit must have reviewed the User Manual carefully, including all drawing-based instructions. The manual should be kept accessible to personnel at all times.
- Operating staff should be properly trained and qualified on hazard and accident prevention, and safe workplace procedures. Staff should be up-to-date on all safety training required in the applicable jurisdiction.

2.11.2. Maintenance Staff

Only qualified service personnel can perform maintenance tasks on this equipment.

2.12. Responsibility of the owner

The owner is the person or entity that operates the unit for commercial or business

purposes or that allows a third party to use the unit. The owner is responsible for the unit and the protection of users and other individuals and property in connection with any operation of the unit, whether by the owner or its personnel or any third party the owner permits to access or use the unit.

2.12.1. Owner responsibilities

Owners are solely responsible for ensuring compliance with the applicable environmental, health and safety regulations, transportation, applicable electrical codes, and any environmental regulations in the jurisdiction where they operate the unit.

CONFIGURATION

Section 3

3.1. Overview

The Spark Cube (the unit) is an industrial, high performance, weather resistant lithium ion battery pack that is designed to be safe and easy to operate. Designed to deliver the full potential of batteries by delivering up to 48,000W of AC Power. With an average life of 8 to 20 years (depending on usage). Idle consumption of the Spark Cube is between 200-600W when in standby mode and should be added to your run time calculations.

3.2. Technical Specifications of the Spark Cube 20kWh

Serial Number		**Model**	**20kWh**
GENERAL INFORMATION		**AC INPUT DATA**	
System Type	AC ESS and DC ESS	**Type of Connector**	Cam-lock receptacle
Size	131.1cm x 105.7cm x 117.9cm [51.60in x 41.60in x 46.40in]	**Continuous Input Power**	9.5kVA @ 120V/240V***
Weight	408.2 kg [900 lbs]	**Nominal Input Current**	40A @ 120V/240V***
Storage Temperature	-20°C to 45°C [-4°F to 113°F]	**Max. Input Current**	50A
Operating Temperature	-20°C to 50°C [-4°F to 122°F]	**Rated Voltage**	120V/240V Split-Phase
Certification/ Inspections	CSA SPE-1000, UL9540, UL9540A, UL1741	**Operating Voltage Range**	190-260V
AC Inputs	Grid, generator	**Operating Frequency**	60Hz
DC Inputs	Solar, DC charger	**AC OUTPUT DATA**	
AC Outputs*	1 x Cam-lock plug (50A) 2 x Twist-lock Non-NEMA plugs (50A max. both) 2 x NEMA 5-20 Outlet (20A max. each)	**Type of Connector**	**Cam-lock receptacle**
DC Output	1 x Chogori connector (100A)	**Number of Outputs**	1 output / 5 receptacles
DC INPUT/OUTPUT DATA		**Continuous Output Power**	12kVA @ 240V
Type of Connector	**Chogori receptacle**	**Max. Output Current**	50A
Energy	20.48kWh	**Nominal Output Voltage**	120V/240V Split-Phase
Battery Chemistry	LiFePO4	**Operating Frequency**	60Hz
Cycles	6000+ Cycles**	**Type of Connector**	**Twist-lock Non-NEMA receptacle**
Nominal Voltage	51.2V	**Number of Outputs**	2 outputs
Operating Voltage Range	44.8-57.6V	**Continuous Output Power (both)**	12kVA @ 240V
Charge Voltage	56V	**Max. Output Current (both)**	50A
Max. Input Current	100A	**Nominal Output Voltage**	120V/240V Split-Phase
Max. Output Current	100A	**Operating Frequency**	60Hz
PV INPUT DATA		**Type of Connector**	**NEMA 5-20 Outlet**
Type of Connector	**MC4 Connector**	**Number of Outputs**	2 outputs
Number of Inputs	3 inputs	**Continuous Output Power (both)**	2.4kW
Max. Usable Input Current	25A first string, 15A each second and third string	**Max. Output Current (both)**	20A
Operating Voltage Range	140-500V DC	**Nominal Output Voltage**	120V Single Phase
Solar Max. Power	18kW	**Operating Frequency**	60Hz
Safety Features Solar reverse polarity protection, overload protection, short circuit protection, surge protection, over temperature shut off.			

Note

*The total AC output current for the entire unit is 50A. Please ensure the combination of outputs does not exceed this limit to avoid tripping the breakers, or a unit failure.
**Cycle test by the standard charge and discharge method.
***Minimum generator size required: 12kW

3.3. Technical Specifications of the Spark Cube 30kWh

Serial Number		Model	**30kWh**
GENERAL INFORMATION		**AC INPUT DATA**	
System Type	AC ESS and DC ESS	**Type of Connector**	Cam-lock receptacle
Size	131.1cm x 105.7cm x 117.9cm [51.60in x 41.60in x 46.40in]	**Continuous Input Power**	17.5kVA @ 120V/208V***
Weight	555 kg [1,223.57 lbs]	**Nominal Input Current**	84A @ 120V/208V***
Storage Temperature	-20°C to 45°C [-4°F to 113°F]	**Max. Input Current**	100A
Operating Temperature	-20°C to 50°C [-4°F to 122°F]	**Rated Voltage**	120V/208V 3-Phase
Certification/ Inspections	CSA SPE-1000, UL9540, UL9540A, UL1741	**Operating Voltage Range**	190-260V
AC Inputs	Grid, generator	**Operating Frequency**	60Hz
DC Inputs	Solar, DC charger	**AC OUTPUT DATA**	
AC Outputs*	1 x Cam-lock plug (100A) 2 x Twist-lock Non-NEMA plugs (50A max. each) 2 x NEMA 5-20 Outlet (20A max. each)	**Type of Connector**	**Cam-lock receptacle**
DC Output	1 x Chogori connector (100A)	**Number of Outputs**	1 output / 5 receptacles
DC INPUT/OUTPUT DATA		**Continuous Output Power**	20.8kVA @ 208V
Type of Connector	**Chogori receptacle**	**Max. Output Current**	100A
Energy	30.72kWh	**Nominal Output Voltage**	120V/208V 3-Phase
Battery Chemistry	LiFePO4	**Operating Frequency**	60Hz
Cycles	6000+ Cycles**	**Type of Connector**	**Twist-lock Non-NEMA receptacle**
Nominal Voltage	51.2V	**Number of Outputs**	2 outputs
Operating Voltage Range	44.8-57.6V	**Continuous Output Power (each)**	6.9kVA @ 208V
Charge Voltage	56V	**Max. Output Current (each)**	50A
Max. Input Current	100A	**Nominal Output Voltage**	120V/208V Single-Phase
Max. Output Current	100A	**Operating Frequency**	60Hz
PV INPUT DATA		**Type of Connector**	**NEMA 5-20 Outlet**
Type of Connector	**MC4 Connector**	**Number of Outputs**	2 outputs
Number of Inputs	3 inputs	**Continuous Output Power (each)**	2.4kW
Max. Usable Input Current	25A first string, 15A each second and third string	**Max. Output Current (each)**	20A
Operating Voltage Range	140-500V DC	**Nominal Output Voltage**	120V Single Phase
Solar Max. Power	18kW	**Operating Frequency**	60Hz
Safety Features Solar reverse polarity protection, overload protection, short circuit protection, surge protection, over temperature shut off.			

Note

*The total AC output current for the entire unit is 100A. Please ensure the combination of outputs does not exceed this limit to avoid tripping the breakers, or a unit failure.
**Cycle test by the standard charge and discharge method.
***Minimum generator size required: 20kW

3.4. Technical Specifications of the Spark Cube 60kWh

Serial Number		Model	**60kWh**
GENERAL INFORMATION		**AC INPUT DATA**	
System Type	AC ESS and DC ESS	**Type of Connector**	Cam-lock receptacle
Size	131.1cm x 105.7cm x 117.9cm [51.60in x 41.60in x 46.40in]	**Continuous Input Power**	17.5kVA @ 120V/208V***
Weight	840 kg [1,851.88 lbs]	**Nominal Input Current**	84A @ 120V/208V***
Storage Temperature	-20°C to 45°C [-4°F to 113°F]	**Max. Input Current**	100A
Operating Temperature	-20°C to 50°C [-4°F to 122°F]	**Rated Voltage**	120V/208V 3-Phase
Certification/ Inspections	CSA SPE-1000, UL9540, UL9540A, UL1741	**Operating Voltage Range**	190-260V
AC Inputs	Grid, generator	**Operating Frequency**	60Hz
DC Inputs	Solar, DC charger	**AC OUTPUT DATA**	
AC Outputs*	1 x Cam-lock plug (100A) 2 x Twist-lock Non-NEMA plugs (50A max. each) 2 x NEMA 5-20 Outlet (20A max. each)	**Type of Connector**	**Cam-lock receptacle**
DC Output	1 x Chogori connector (100A)	**Number of Outputs**	1 output / 5 receptacles
DC INPUT/OUTPUT DATA		**Continuous Output Power**	20.8kVA @ 208V
Type of Connector	**Chogori receptacle**	**Max. Output Current**	100A
Energy	61.44kWh	**Nominal Output Voltage**	120V/208V 3-Phase
Battery Chemistry	LiFePO4	**Operating Frequency**	60Hz
Cycles	6000+ Cycles**	**Type of Connector**	**Twist-lock Non-NEMA receptacle**
Nominal Voltage	51.2V	**Number of Outputs**	2 outputs
Operating Voltage Range	44.8-57.6V	**Continuous Output Power (each)**	6.9kVA @ 208V
Charge Voltage	56V	**Max. Output Current (each)**	50A
Max. Input Current	100A	**Nominal Output Voltage**	120V/208V Single-Phase
Max. Output Current	100A	**Operating Frequency**	60Hz
PV INPUT DATA		**Type of Connector**	**NEMA 5-20 Outlet**
Type of Connector	**MC4 Connector**	**Number of Outputs**	2 outputs
Number of Inputs	3 inputs	**Continuous Output Power (each)**	2.4kW
Max. Usable Input Current	25A first string, 15A each second and third string	**Max. Output Current (each)**	20A
Operating Voltage Range	140-500V DC	**Nominal Output Voltage**	120V Single Phase
Solar Max. Power	18kW	**Operating Frequency**	60Hz
Safety Features Solar reverse polarity protection, overload protection, short circuit protection, surge protection, over temperature shut off.			

Note

*The total AC output current for the entire unit is 100A. Please ensure the combination of outputs does not exceed this limit to avoid tripping the breakers, or a unit failure.
**Cycle test by the standard charge and discharge method.
***Minimum generator size required: 20kW

3.5. Spark Cube General Dimensions

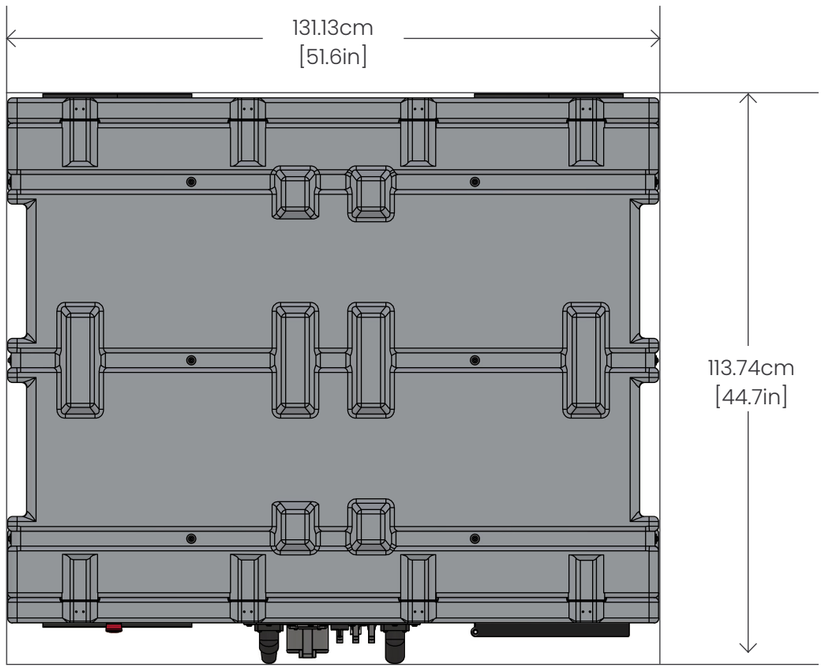

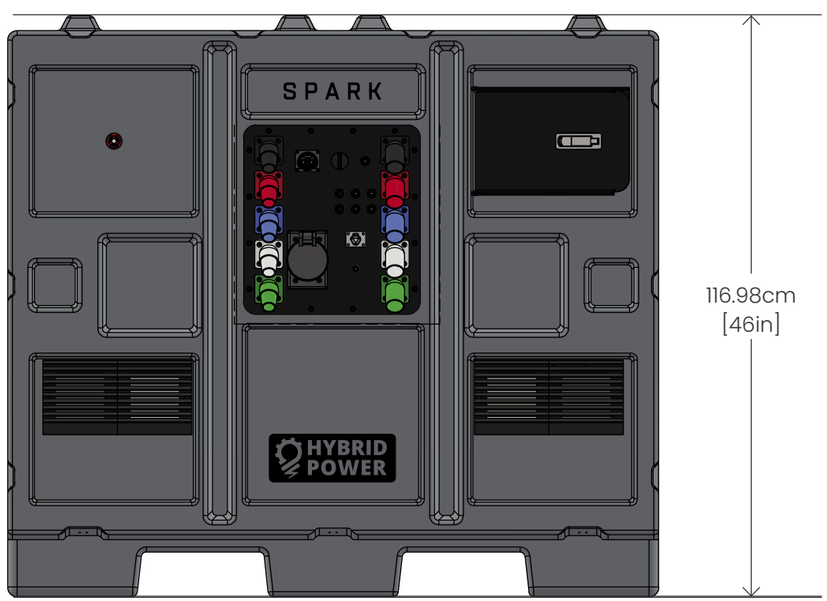

Appearance may deviate slightly due to ongoing innovation.

3.6. Spark Cube Main Control Panel

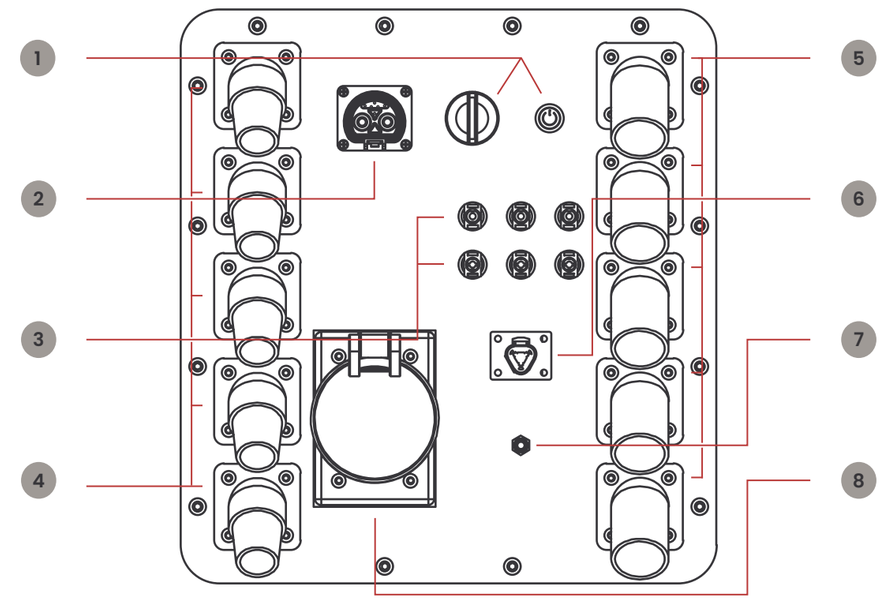

Indicator	Product Details
1	Power Buttons
2	Input: 48V DC 100A
3	Input: 120-500V DC 15A Per String
4	Output: 208V 3 Phase 60Hz 63A or 120V/240V Split-phase 60Hz 50A, depending on the model
5	Input: 208V 3 Phase 60Hz 90A or 120V/240V Split-phase 60Hz 110A depending on the model
6	Automatic Generator Start
7	Ground
8	Output: 208V 3 Phase 60Hz 50A or 120V/240V Split-phase 60Hz 60A, depending on the model

Rotate page

Input Receptacle with cap, 100A 48V DC		1IC0362205-2702	Plug, 2 + 8 pins (Chogori Technologies) **(It is included with the Spark Cube)**		1IC0362205-2701
MC4 Male Connector Plus 10 AWG		H4SMM6DM	MC4 Female Connector Plus 10 AWG		H4SFC6DM
MC4 Female Connector Plus 10 AWG		H4SFM6DM	MC4 Male Connector Plus 10 AWG		H4SMC6DM
Output Receptacle, 50A 120V/250V, 3-Pole 4-Wire Grounding, Non-NEMA (Depending on model)		CS6369	Locking Devices, Twist-Lock®, Industrial, Male Plug, 50A, 125/250V 3-Pole 4-Wire Grounding, Non-NEMA, Screw Terminal, Black and White (Hubbell)		CS6365C
Output Receptacle, 60A 120V/250V Split-phase, 3-Pole 4-Wire Grounding, Non-NEMA (Depending on model)		AH460R12W	Output Plug, 60A 125V/250V, 3-Pole 4-Wire Grounding, Non-NEMA (Eaton)		AH460P12W
Output Receptacle, 100A 120V/250V Split-phase, 3-Pole 4-Wire Grounding, Non-NEMA (Depending on model)		AH4100R12W	Output Plug, 100A 125V/250V, 3-Pole 4-Wire Grounding, Non-NEMA (Eaton)		AH4100P12W
Input Receptacle, 100A 120V/250V Split-phase, 3-Pole 4-Wire Grounding, Non-NEMA (Depending on model)		AH4100B12W	Input Connector, 100A 125V/250V, 3-Pole 4-Wire Grounding, Non-NEMA (Eaton)		AH4100C12W
Housings Receptacle Gray 3 pin Rectangular for Autostart of Generator		DT04-3P-L012	Housings Plug Gray 3 pin Rectangular S-Wedgelock, 3 position 3 Contacts, 16-20 AWG **(It is included with the Spark Cube)**		DT06-3S AW3S 1062-16-0122

Rotate page

3.6.1. Power Connectors

In the following table are shown the power connectors used in the Spark Cube with their mate parts required to wire the inputs and outputs of the unit. Note, not all connectors may be present on the Spark.

Spark Cube Receptacle Type	Model	Manufacturer Part Number	User Plug Type Required	Model	Manufacturer Part Number
Input Receptacle, 208V 3-phase or 120V/240V Split-Phase depending on model (Black)		HBLMRASBK	Cam-lock 300A Connector, cable size 6-2/0 AWG (Black)(Hubbell)		HBL300FBK
Input Receptacle, 208V 3-phase or 120V/240V Split-Phase depending on model (Red)		HBLMRASR	Cam-lock 300A Connector, cable size 6-2/0 AWG (Red)(Hubbell)		HBL300FR
Input Receptacle, 208V 3-phase or 120V/240V Split-Phase depending on model (Blue)		HBLMRASBL	Cam-lock 300A Connector, cable size 6-2/0 AWG (Blue)(Hubbell)		HBL300FBL
Input Receptacle, 208V 3-phase or 120V/240V Split-Phase depending on model (White)		HBLMRASW	Cam-lock 300A Connector, cable size 6-2/0 AWG (White) (Hubbell)		HBL300FW
Input Receptacle, 208V 3-phase or 120V/240V Split-Phase depending on model (Green)		HBLMRASGN	Cam-lock 300A Connector, cable size 6-2/0 AWG (Green) (Hubbell)		HBL300FGN
Output Receptacle, 208V 3-phase or 120V/240V Split-Phase depending on model (Black)		HBLFRASBK	Cam-lock 300A Plug, cable size 6-2/0 AWG (Black) (Hubbell)		HBL300MBK
Output Receptacle, 208V 3-phase or 120V/240V Split-Phase depending on model (Red)		HBLFRASR	Cam-lock 300A Plug, cable size 6-2/0 AWG (Red) (Hubbell)		HBL300MR
Output Receptacle, 208V 3-phase or 120V/240V Split-Phase depending on model (Blue)		HBLFRASBL	Cam-lock 300A Plug, cable size 6-2/0 AWG (Blue) (Hubbell)		HBL300MBL
Output Receptacle, 208V 3-phase or 120V/240V Split-Phase depending on model (White)		HBLFRASBL	Cam-lock 300A Plug, cable size 6-2/0 AWG (White)(Hubbell)		HBL300MW
Output Receptacle, 208V 3-phase or 120V/240V Split-Phase depending on model (Green)		HBLFRASGN	Cam-lock 300A Plug, cable size 6-2/0 AWG (Green)(Hubbell)		HBL300MGN

3.7. Spark Cube Grounding Point

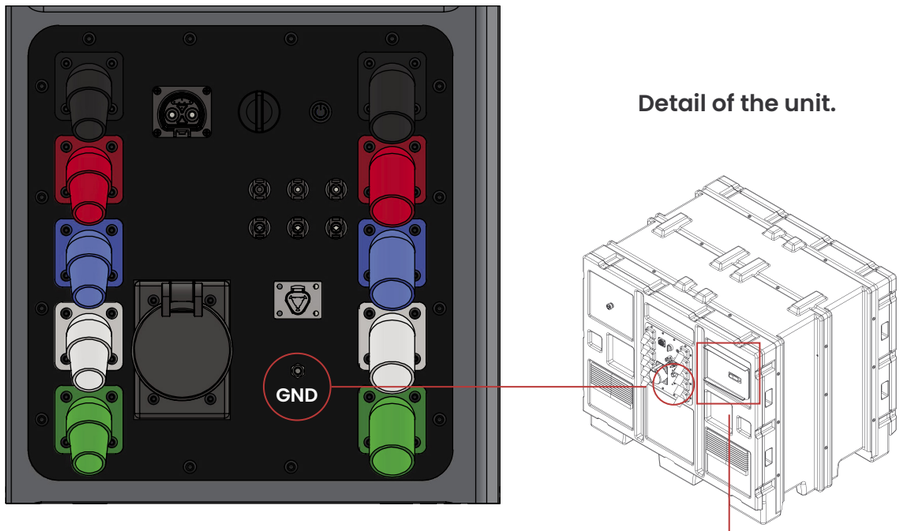

Detail of the unit.

3.8. Spark Cube Breaker Box

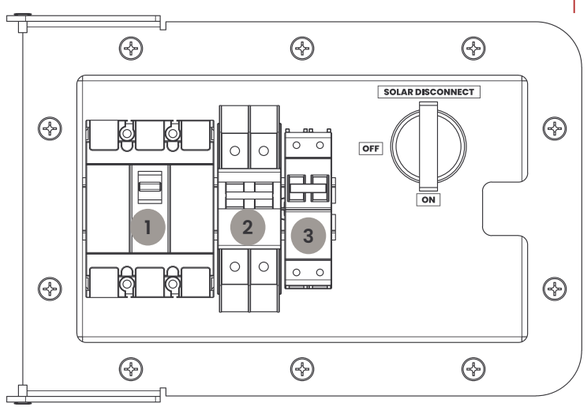

Indicator	Product Details
1	208V 3-Phase 60Hz 63A Output Breaker or 120V/240V 60Hz 63A Output Breaker, depending on the model
2	48V DC 100A Input Breaker
3	208V 3- Phase 60Hz 50A Output Breaker or 120V/240V 60Hz 50A Output Breaker, depending on the model

3.9. Emergency Stop (E-Stop)

The Emergency Stop (E-Stop) is located on the front of the unit.

WARNING

Risk of electrical shock!

The E-stop does not isolate the high-voltage systems inside the unit.

If any maintenance is required, the internal systems need to be isolated.

NOTICE

When the E-stop is used only the AC output of the unit is disabled. The E-stop, when used, also stops the charging process and clears faults.

Engaging the E-stop button stops all power output from the unit.

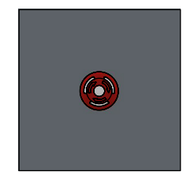

Location of the E-stop.

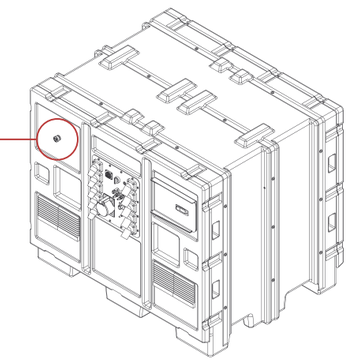

3.10. Unit Identification

The unit identification plate can be found on the front of the Spark Cube. The identification plate contains the following information:

- Model Number
- Manufacturing Date
- Unit Serial Number
- Range of voltages provided with corresponding output capabilities
- Weight and dimension details

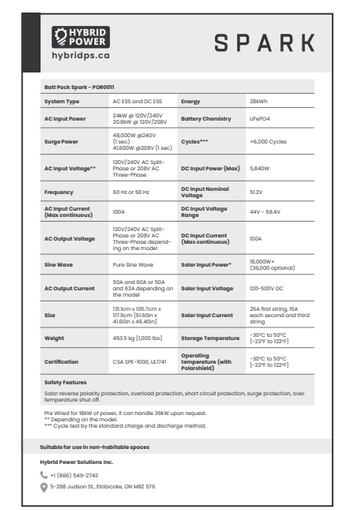

HYBRID POWER
hybridps.ca

SPARK

Batt Pack Spark - PO8001I			
System Type	AC ESS and DC ESS	Energy	28kWh
AC Input Power	24kW @ 120V/240V 20.8kW @ 120V/208V	Battery Chemistry	LiFePO4
Surge Power	48,000W @240V (1 sec) 41,600W @208V (1 sec)	Cycles***	+6,000 Cycles
AC Input Voltage**	120V/240V AC Split-Phase or 208V AC Three-Phase	DC Input Power (Max)	5,840W
Frequency	60 Hz or 50 Hz	DC Input Nominal Voltage	51.2V
AC Input Current (Max continuous)	100A	DC Input Voltage Range	44V - 58.4V
AC Output Voltage	120V/240V AC Split-Phase or 208V AC Three-Phase depending on the model	DC Input Current (Max continuous)	100A
Sine Wave	Pure Sine Wave	Solar Input Power*	18,000W+ (36,000 optional)
AC Output Current	50A and 60A or 50A and 63A depending on the model	Solar Input Voltage	120-500V DC
Size	133.1cm x 105.7cm x 117.9cm [53.63in x 41.63in x 46.40in]	Solar Input Current	25A first string, 15A each second and third string
Weight	453.5 kg [1,000 lbs]	Storage Temperature	-30°C to 50°C [-22°F to 122°F]
Certification	CSA SPE-1000, UL1741	Operating temperature (with Polarshield)	-30°C to 50°C [-22°F to 122°F]

Safety Features

Solar reverse polarity protection, overload protection, short circuit protection, surge protection, over temperature shut off.

Pre Wired for 18kW of power, it can handle 36kW upon request.
** Depending on the model.
*** Cycle test by the standard charge and discharge method.

Suitable for use in non-habitable spaces

Hybrid Power Solutions Inc.
+1 (866) 549-2743
5-288 Judson St., Etobicoke, ON M8Z 5T6

3.11. Neutral Bounding

As per NFPA and CEC regulations, the unit does not have a bonded ground and neutral as this is typically done at the input grid or generator connection. If no grid or input generator is present, external bounding of the ground and neutral may be required. Please check local regulations with regards to this matter.

3.12. Quick Start Guide

Follow these step in order to get the Spark Cube operational.

1. Ensure all breakers are in **OFF** position.
2. Ground Spark using grounding plate and grounding screw.
3. Push **START** button.
4. Turn key to **START**, hold 10 seconds, then release in **ON** position.
5. Ensure receptacles are properly wired and turn on breakers.

3.13. Connecting Cam-Lock Cables

Enable a secure and efficient electrical power transfer by connecting your load to the unit with cam-lock cables.

To connect cam-lock cables, follow these steps:

1. At the front of the unit, locate the main control panel.

For more information, see Spark Cube Main Control Panel on page 27.

2. Connect your ground.

3. Insert your cam-lock plugs, and rotate your cam-lock plugs 180° clockwise to fully secure them.

Make sure you have identified the cables and fitted the correct **NEUTRAL** and **GROUND** cables.

Your cam-lock connections are now in place and ready to receive power from the unit.

3.14. Connecting Twist-Lock Cables

Enable a secure and efficient electrical power transfer by connecting your load to the unit with twist-lock cables.

To connect twist-lock cables, follow these steps:

1. At the front of the unit, locate the main control panel.

For more information, see Spark Cube Main Control Panel on page 27.

2. Open the cap of the twist-lock outlet.

3. Insert your twist-lock cable, and rotate your twist-lock plug clockwise until it stops to fully secure it.

Your twist-lock connections are now in place and ready to receive power from the unit.

NOTICE

The power delivered through the twist-lock connection depends on the voltage output that you set for the unit.

3.15. Using Auto Start and Stop

The Spark Cube has an auto start and stop functionality that automatically engages a supplemental diesel generator to charge the unit battery.

If the unit charge is below 18% when plugged in or recovered from a fault, the generator will need to be manually turned on.

If the unit battery charge is at 18%, the unit signals the connected generator to start charging. When the unit battery charge reaches 90 %, the unit signals the connected generator to stop charging.

NOTICE

To be able to charge the unit with a supplemental generator, make sure you connect the charger from the generator to the unit's charge port.

To use the auto start and stop functionality, follow these steps:

1. Locate the generator autostart connection port on the front of the unit and identify if your generator operates in Normally Open (NO) or Normally Closed (NC) mode. The most common is normally open.

2. Connect the Normally Open and Common or Normally Closed and Common wires to the two wire start on your generator using 18 to 22 AWG wires. NO is the left pin, NC is the right pin and common is the bottom pin.

3. Connect the generator to the input connectors and ensure the generator voltage matches the input voltage requirements.

4. Turn on the Spark Cube

5. Turn on the generator in Auto mode.

3.16. Monitor System Setup

3.16.1 Wifi/GPRS/4G/WLAN Dongle Connection

Users can use a WiFi/ WLAN /4G /2G dongle to monitor their inverter, and view the monitoring data on a computer or smart phone remotely.

To view data on smart phone, please download APP from the Google Play or Apple APP store, then login with their user account.

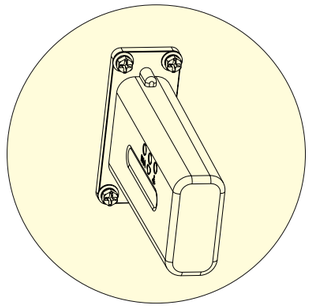

Make sure that the dongle is connected to the unit.

3.16.2 Setup the Monitor System

1. Sign up an account on the mobile phone APP or Website

The "customer code" is a code we assign to your distributor or installer. You can contact your supplier for their code.

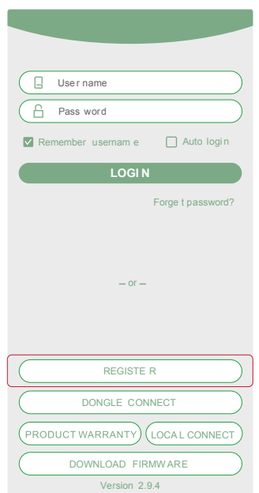

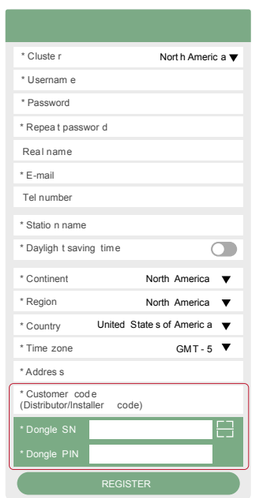

2. The station and wifi dongle will be created auto when you register, if you want have more stations need to be created, you can create as below

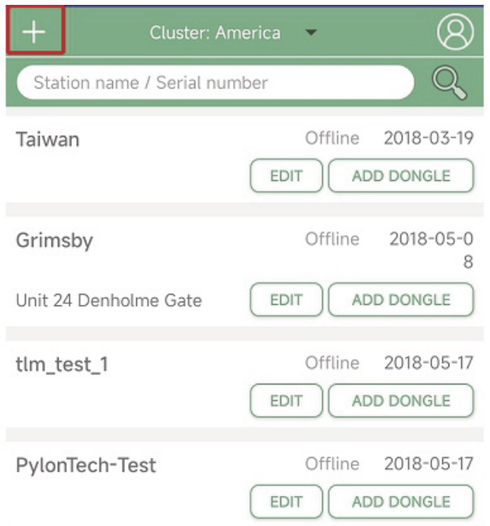

3.16.3 Set Homewifi Password to Dongle

1. Connect your mobile phone to the "BAxxxxxxxx" wireless network where "BAxxxxxxxx" is the serial number of the WiFi dongle.

2. Click the "WiFi MODULE CONNECT" button on the APP

3. Select the home WiFi that the WiFi dongle is to be connected to,and enter the WiFi's password. And then click "HomeWifi Connect". The WiFi dongle will restart and try to connect to our server automatically.

4 .Check the LEDs' status on the WiFi dongle. The middle light should be solidly lit when the WiFi dongle connects to our server successfully.

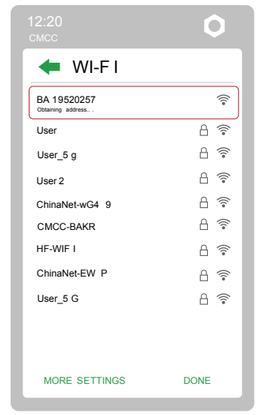

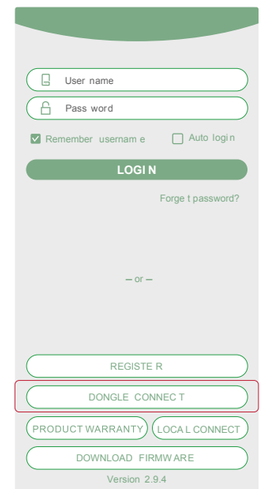

5. Now you can disconnect your mobile phone from the "BAxxxxxxxx" wireless network. Login on the APP with your account, you'll find the inverter information already appears. Now you'll be able to monitor and control the inverter remotely on any smart phone or computer that has an Internet connection.

Please download the following guides for setting up WiFi dongle and monitoring account at

Document Reference:

1. Wifi Quick Guidance

Quick guidance for setting connection of WiFi module to home WiFi, you can also find a printed version in the packaging of the WiFi module.

2. Monitor system setup for Distributors and Monitor system setup for endusers Account registration, the description of each items and parameters, setting parameters

3. Monitor_UI_Introduction Introduction of monitor interface

3.16.4 4G Dongle Monitoring Setup

Customer should register the account as 3.10.2 first. Make sure you have put SIM card inside 4G dongle. Plug 4G dongle in, and 5 minutes later, you will be able to see your inverter online.

3.16.5 Third Party RS485 Communication

Meter 485B&485A: are used when the Meter is not connected. These two pins can be used to communicate with the inverter using our Rs485 modbus protocol.

INV485: This interface is shared with the WIFI module. If the WIFI module is not in use, users can use this interface to communicate with the inverter.

Please contact your distributor to get the protocol for third party APP development.

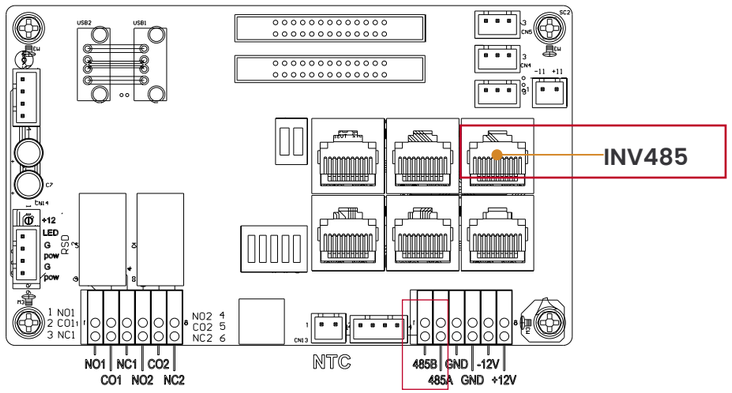

Meter

Pin	Description
1	485B
2	485A
3-8	/

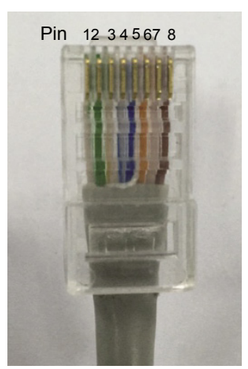

3.17. Trailer Option

The unit can be towed using a vehicle fitted with the correct pintle hitch and lunette ring connections.

Before attaching the pintle hitch, check the following:

- The towing vehicle has direct and straight access to the unit so that it can reverse straight onto the unit hitch.
- The tongue jack is extended so that the lunette ring is slightly higher than the pintle hitch on the towing vehicle. You may not be able to adjust the height of the tongue jack until the pintle hitch is near the trailer.
- Have a person guide the towing vehicle driver when they are reversing towards the trailer.
- Make sure the pintle hitch and lunette ring are lightly greased. This prevents noise during towing and extends the life of towing parts.

To attach the unit to a towing vehicle, follow these steps:

1. Remove the locking pin and lift the pintle hitch latch.

2. Position the pintle hitch directly under the lunette ring.

3. Using the tongue jack, lower the trailer and lunette ring coupler onto the pintle hitch hook.

4. Close and lock the pintle hitch latch and insert the latch pin.

5. Fully retract the tongue jack so that the full load of the trailer is taken by the pintle hitch and towing vehicle.

6. Attach the trailer towing chains to the towing vehicle. Cross over the chains and twist if there is any slack and may drag on the ground.

7. Attach the trailer 7-pin connector to the towing vehicle. The 7-pin trailer cable contains both the trailer lights and trailer electric brakes.

8. Attach the emergency brake cable.

9. Start the towing vehicle engine and test the trailer brake and running lights.

10. Remove and stow the wheel chocks.

You are now ready to start towing the unit.

WARNING

Risk of crushing or trapped hands!

Stay clear of the pintle hitch and lunette ring as the tongue jack is lowered.

OPERATION

Section 4

4.1. General Operation

*Image may defer from actual unit based on product version and is subject to change at any time.

The plug cover should always be used to protect the plug from corrosion and other environmental factors.

NOTICE

The system should always be left in the OFF position when not in use.

In the ON position, very little power is consumed but will slowly deplete the battery. HPS recommends always turning off the Spark Cube when not in use.

When using the system in cold temperatures (below 0°C), discharge power may be limited and run time can be affected by up to 40%. The Spark Cube includes our Polarshield protection when using the system in sustained temperatures lower than 0°C [22°F] and will keep the battery warm.

NOTICE

When operating in temperatures below 0°C [22°F] between work shifts, follow one of these practices:

- Keep the Spark powered ON and connected to grid/generator power, or
- Ensure the Spark is fully charged before powering it off.

These practices help maintain battery temperature above 0°C [22°F] and eliminate pre-shift charging requirements. This prevents operational delays caused by waiting for cold batteries to warm up to the minimum 0°C [22°F] required for charging and optimal performance.

The Spark Cube will not allow a discharge to occur after being fully depleted until the system has been charged passed 23%.

Battery Depletion – If the unit is left in the ON position, standby power will be drawn and slowly deplete the unit. This is especially dangerous when the pack has been fully depleted. Please ensure that the unit is charged after having been depleted.

The unit should be charged at a minimum interval of 3 months. Please note that the gauge will not show any reduction in energy level, even though a minor discharge did occur when stored and should be stored fully charged.

A monthly self discharge of 5-10% will occur and may damage a unit that has been left stored after being depleted.

Just as a car battery will be depleted and need to be replaced after prolonged storage with no charging, the Spark Cube will do the same. Always ensure that you charge the product after use and turn the unit off. A battery stored fully discharged may permanently damage the product. **HPS is not responsible for batteries left depleted and these will not qualify for a warranty replacement.**

DANGER

Risk of death!

Do not connect tools to the plug that require more current than that stated on the unit's identification plate. This can cause; damage, shock, injury and/or death. Please use caution when operating tools in wet conditions as this may lead to electrical shock, injury and/or death. HPS is not responsible for damaged or faulty equipment that has been plugged into the Batt Pack and has caused an incident.

Using the Spark Cube as a UPS (uninterrupted power source) or as backup power supply: Always ensure the power button is left in the ON position and the charging port is connected to a main power source, either generator or grid rated for the maximum load value. **If the maximum power of the grid or generator is insufficient to power the load, system settings must be changed to reflect this and allow only charging from these sources. This will allow any loads above and beyond these sources to be powered by the battery instead of via bypass.** Plug all loads into the output port. This will ensure that if the power from the mains is interrupted, your devices will not be affected.

CAUTION

Risk of damage to property!

Always use appropriately sized extension cords and power products that meet the requirements of your specific application and local laws/regulations.

4.2. Break in Period

NOTICE

Although the battery system is delivered balanced, below advertised performance may be present during the first 5 cycles (charge and discharge). As the cells in the battery module equalize to within +/- 0.01V. This is completely normal and is the nature of Lithium ion batteries. Use the unit as normal but do acknowledge this break in period.

Ideally during this break in period, HPS recommends the unit be charged to 100%, then left on the charger for +2 hours afterwards. This will give the cells a chance to balance in order to achieve optimal performance. We also recommend not to discharge past 25%. This recommended break in habit is to insure optimal performance as quickly as possible.

Not following this break in recommendation will not damage the system but will lead to reduced performance during the first 10 cycles. As the system will acknowledge the imbalance. It may also delay achieving peak performance.

4.3. Recharging Guide and Storage

Recharged using either a generator or grid through the main input terminals allowing the battery to be fully charged

It is safe to leave the Spark Cube plugged into the charger for extended periods of times.

4.4. Transporting and Shipping

If shipping units is required, please ensure to list the Spark Cube with your shipper as a hazardous goods and follow all required precautions and regulations. The Spark Cube is a UN38.3 certified, class UN3481 (lithium ion battery in equipment). It is the shipper's responsibility to ensure all paperwork and required packaging is in order. HPS can help guide you through the process.

4.5. Extreme Temperatures & Fan Operation

Using the product in extreme temperatures, above 50ºC and below -30 ºC may reduce the total life cycles of the product. **The warranty does not cover such usage.**

Note that performance may be affected in temperatures under 0ºC. Run time can be reduced as well as available power.

To improve performance in cold weather scenarios, HPS suggests storing and charging the system at room temperature before exposing to cold temperatures. **Fans operate when the internal temperature of the system is higher than 34ºC. This generally occurs in warmer climates and when the battery is being charged**

or is being discharged at a high-power output.

4.6. Starting Motors

Please exercise caution when powering motors with the Spark Cube. Most motors require 2-3 times their continuous operating amperage at start-up. Certain motors may require more amperage than can be produced. Note that the surge power of 48kW is sustained for 500ms and may not be enough for some motors. Motors with a soft start feature may help to reduce this inrush current.

Please note that Hybrid Power Solutions Inc. is not responsible for damaged tools, equipment or electronics.

4.7. Dusty Environment

In dusty environment, please vacuum the intake and exhaust vents occasionally to prevent dust buildup. Failing to do so could lower the cooling efficiency of the unit.

4.8. Transporting the Unit

The unit can be transported using a flat-bed or goose-neck trailer.

NOTICE

Before shipping the unit, make sure the unit has passed inspection and all necessary repairs and maintenance tasks have been completed.

DANGER

Risk of injury or death!

Lifting and loading a trailer with one or more units must only be done by trained and qualified personnel.

In order to transport the unit using a flat-bed or goose-neck trailer, follow these guidelines:

- Make sure the trailer and unit are fit for purpose and loaded correctly.
  - Place the unit level to the flat-bed and evenly distribute the weight across each axle.
  - Support the tongue of the unit with the supplemental jack stand provided with the unit. To prevent damage during transit, do not support the tongue with just the tongue jack.
- Choose the proper securing method.

- Securely tie down the unit with straps or chains to prevent shifting or movement during transportation. Position the straps to support the weight of the unit and prevent undercarriage damage.
- The chain or strap tension must not load each axle more than 7,000 lbs (including unit weight); vertical tie down force shall not exceed 2,000 lbs per axle.
- Use a wheel chock on both sides of each wheel to prevent movement during transportation.
- To secure the trailer tongue, use the supplemental jack stand provided with the unit.
- The load restraint system needs to secure the unit to the vehicle chassis and prevent movement in any direction.
- Choose a securing system that stops the unit moving without creating other risks.
- Any chains or webbing must be attached to the D-rings on the trailer.

WARNING

Risk of crushing from moving parts!

Do not drive or move the transport vehicle without securing the unit.

- Use adequate load restraint.
  - Dynamic forces are much higher than static forces. For example, more force is required to secure a load when it is moving (dynamic) than when it is stationary (static).
- Load restraint system.
  - The combined strength of the load restraint system must be sufficient to withstand a forward force not less than the total weight of the load to prevent the load moving under severe braking, and half the weight of the load moving backwards and sideways.
- Load and unload the unit properly.
  - Initially, visually inspect the unit to make sure that no damage occurred during transportation. If damage has occurred, contact Hybrid Power Solutions immediately.
  - Make sure that both unit axles remain in contact with the rolling surface during transportation. Avoid lifting the wheels from the ground and overloading a single axle.
  - Roll the unit instead of lifting.
  - To prevent putting undesired lateral load on the wheels and creating a

damaging camber, make sure the operator maintains a turning radius of 6m (20ft) when pulling or tugging the unit.

WARNING

Risk of damage!

Do not use forks under the trailer frame.

- Unload the unit properly.
  - To prevent damage to the undercarriage and both axles, both axles must remain loaded when unloading the unit off a flat- bed or gooseneck trailer. In other words, do not lift an axle off the trailer/ground. Doing so, will overload the remaining axles.

NOTICE

Loading and unloading of the unit is the responsibility of the truck driver or operator. When loading and unloading the unit, the person responsible for doing so must adhere to any federal and state regulations and guidelines regarding the maximum total loading weight.

- To prevent damage to the unit, unload carefully and without sudden shifts or movements.

4.7.1. Department of Transportation Requirements

HPS units can have either of two UN Class 9 markings, UN3480 or UN3536, depending on the unit's date of manufacture. Both markings are valid and represent equivalent requirements for the unit's owner/operator/transporter.

The prototype/low product run regulations apply (49 CFR 173.185(e)). The units can be transported as is with battery modules secured against movement inside of the metal outer case.

These units must be labeled on at least two opposing sides (see excerpt from 172.406 (e)) with the UN3480 Class 9 Hazardous Materials lithium battery label shown below. The size of the label must be at least 100x100 mm. Further, the shipper must complete a regulated shipping paper (Bill of Lading) for each movement of these units (see the example Bill of Lading below). Drivers must have hazmat training but do NOT need a HazMat Endorsement on their Commercial Driver's License.

Note that if these units are shipped for the purposes of testing, no upper production limit applies. If shipped for non-testing purposes, the limit is 100 batteries produced per year.

UN3480 lithium ion battery label

Extract from https://www.ecfr.gov/current/title-49/subtitle-B/chapter-I/subchapter-C/part-172/subpart-E/section-172.406

(e) Duplicate labeling. Generally, only one of each different required label must be displayed on a package. However, duplicate labels must be displayed on at least two sides or two ends (other than the bottom) of—

(1) Each package or overpack having a volume of 1.8 m3 (64 cubic feet) or more;

(2) Each non-bulk package containing a radioactive material;

(3) Each DOT 106 or 110 multi-unit tank car tank. Labels must be displayed on each end;

(4) Each portable tank of less than 3,785 L (1000 gallons) capacity;

(5) Each freight container or aircraft unit load device having a volume of 1.8 m3 (64 cubic feet) or more, but less than 18 m3 (640 cubic feet). One of each required label must be displayed on or near the closure; and

(6) An IBC having a volume of 1.8 m3 (64 cubic feet) or more.

The Moxion Power unit is also classified as UN3536, lithium battery installed in cargo transport unit, Class 9. The unit requires this class of placards on two opposing sides. When you check this entry on the hazardous materials table in 49 CFR 172.101, you see that Special Provision 389 applies.

Table 2 - Extract from 172.101 Hazardous Materials Table

Symbols	Hazardous materials descriptions and proper shipping names	Hazard class or Division	Identification Numbers	PG	Label Codes	Special provisions (§ 172.102)	(8)			(9)	
							Packaging (§ 173.***)			Quantity limitations (see §§ 173.27 and 175.75)	
							Exceptions	Non-bulk	Bulk	Passenger aircraft/rail	Cargo aircraft only
	Lithium batteries installed in cargo transport unit *lithium ion batteries or lithium metal batteries*	9	UN3536			389				Forbidden	Forbidden

The UN Number 3536 must be displayed on both sides of the Class 9 placard. Additionally, the shipper is responsible for filling out a regulated shipping paper (Bill of Lading) for every transport of these units (see the example Bill of Lading below). Although drivers are required to have hazmat training, they do not need a HazMat Endorsement on their Commercial Driver's License.

UN3536, Lithium battery installed in cargo transport unit, Class 9 label

Extract from Section 389 of https://www.ecfr.gov/current/title-49/subtitle-B/chapter-I/subchapter-C/part-172/subpart-B/section-172.102

This entry only applies to lithium ion batteries or lithium metal batteries installed in a cargo transport unit and designed only to provide power external to the cargo transport unit. The lithium batteries must meet the requirements of § 173.185(a) and contain the necessary systems to prevent overcharge and over discharge between the batteries. The batteries must be securely attached to the interior structure of the cargo transport unit (e.g., by means of placement in racks, cabinets, etc.) in such a manner as to prevent short circuits, accidental operation, and significant movement relative to the cargo transport unit under the shocks, loadings, and vibrations normally incident to transport. Hazardous materials necessary for the safe and proper

operation of the cargo transport unit (e.g., fire extinguishing systems and air

conditioning systems), must be properly secured to or installed in the cargo transport unit and are not otherwise subject to this subchapter. Hazardous materials not

necessary for the safe and proper operation of the cargo transport unit must not be transported within the cargo transport unit. The batteries inside the cargo transport unit are not subject to marking or labeling requirements of part 172 subparts D and E of this subchapter. The cargo transport unit shall display the UN number in a manner in accordance with § 172.332 of this subchapter and be placarded on two opposing

sides. For transportation by aircraft, cargo transport units may only be offered for

transportation and transported under conditions approved by the Associate

Administrator.

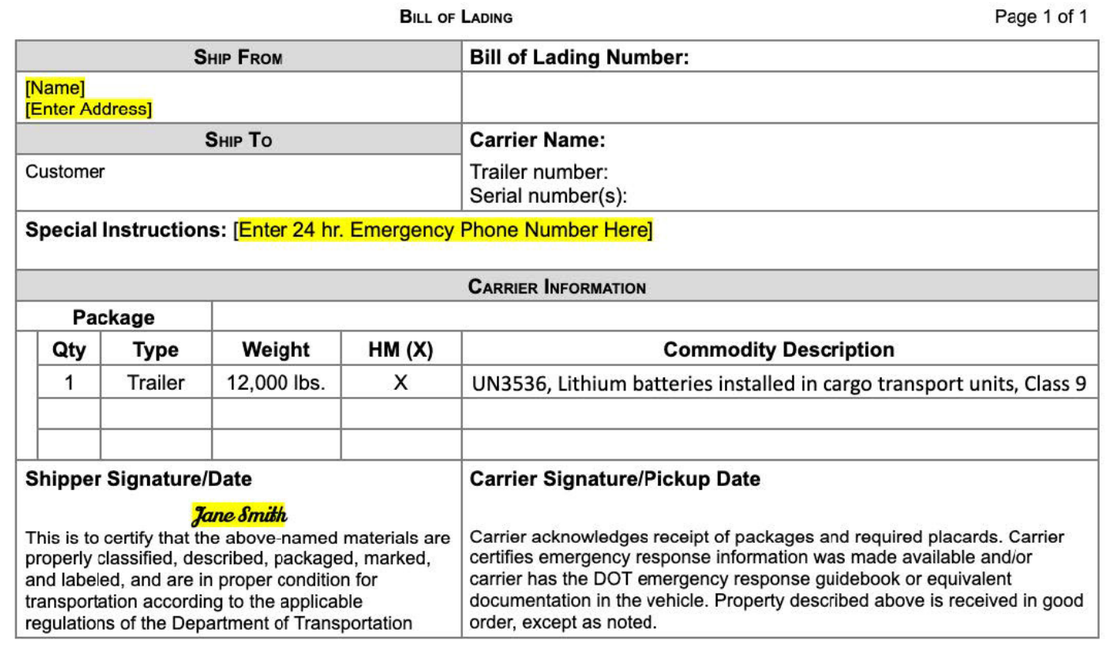

BILL OF LADING

Page 1 of 1

SHIP FROM	Bill of Lading Number:
[Name] [Enter Address]	
SHIP TO	**Carrier Name:**
Customer	Trailer number: Serial number(s):
Special Instructions: [Enter 24 hr. Emergency Phone Number Here]	

CARRIER INFORMATION				
Package				
Qty	Type	Weight	HM (X)	Commodity Description
1	Trailer	12,000 lbs.	X	UN3536, Lithium batteries installed in cargo transport units, Class 9

Shipper Signature/Date	Carrier Signature/Pickup Date
Jane Smith This is to certify that the above-named materials are properly classified, described, packaged, marked, and labeled, and are in proper condition for transportation according to the applicable regulations of the Department of Transportation	Carrier acknowledges receipt of packages and required placards. Carrier certifies emergency response information was made available and/or carrier has the DOT emergency response guidebook or equivalent documentation in the vehicle. Property described above is received in good order, except as noted.

Bill of Lading

4.9. How to Set Up an Earth Connection

WARNING

Risk of electrical shock!

CONNECTING THE GROUND.

Only qualified and trained electricians that know local electrical and safety code guidelines must connect the required ground connections.

Consult with local Electrical and Safety Codes for proper connection based on condition of use.

The Occupational Safety and Health Administration (OSHA) and the National Electrical Code (NEC) recommend that if the unit is providing electrical power to a structure, for example, home, office shop, trailer or similar, it must be connected to a grounding electrode system, such as a driven ground rod.

For more information about ground connections, contact Hybrid Power Solutions. Call +1 (289) 633-5055 or Info@hybridps.ca.

4.10. How to Set Up a Ground Rod

WARNING

Risk of electrical shock!

BEFORE OPERATING THE UNIT.

Refer to Article 250 (Grounding and Bonding) of National Electrical Code (NEC) for guidance on generator grounding, including the Conductor Grounding Table for appropriate ground conductor sizing.

Check with all relevant governing bodies on electrical grounding requirements for generators.

If conditions of use require a grounding rod, make sure the ground rod installation is done in accordance to the above guidelines and requirements.

The unit bring-up and ground rod installation activities must only be done by qualified personnel.

For more information about ground connections and examples of appropriate installations contact Hybrid Power Solutions.

Call +1 (289) 633-5055 or Info@hybridps.ca.

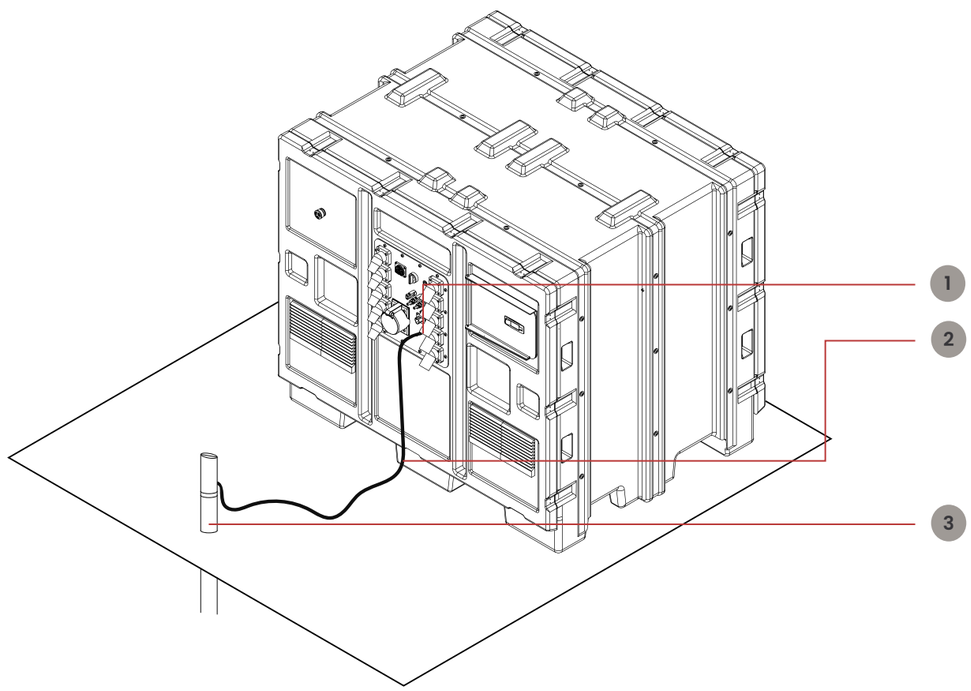

Indicator	Product Details
1	Unit Ground Block
2	Ground Cable
3	Ground Rod or Plate

4.11. Restarting the Unit After Low-Voltage Battery Depletion

The control system and electronics on the unit relies on the battery system. If the battery has been drained, for example, the unit was left on during transit or has been idle for extended periods, you may need to charge the battery before you can use the unit.

In addition, if the unit has been depleted to the point where output power has been shut off (Default is 18% SoC - State of Charge), the Spark Cube must be charged back up to a higher percentage before output power is resumed (typically 23% SoC). During the charging process, power can be bypassed from the generator/grid directly to the load if the generator/grid is large enough to do so.

To charge the battery, follow these steps:

1. Turn **OFF** unit and wait 90 seconds

2. Turn **ON** AC generator or connect to grid.

3. Turn **ON** the unit using the standard start procedure but hold the **ON** key in the **START** position for 30 seconds.

4.12. Neutral Ground Bond Site and Application Engineering Considerations

To safely and reliably operate the unit in compliance with electrical codes and best practices, please refer to the site configurations listed below.

NOTICE

The latest edition of NFPA 70/NEC and all local codes must be referenced for proper installation and shall take precedence over any guidance provided herein.

4.12.1. Site Configuration 1

The 208V 3-phase unit is connected to a standard 3-phase load.

- No special considerations needed.
- Connect L1, L2, L3, N, and Ground as normal.

When the unit is in 240V operating mode (split phase), L3 in the figure below should be disconnected from the unit.

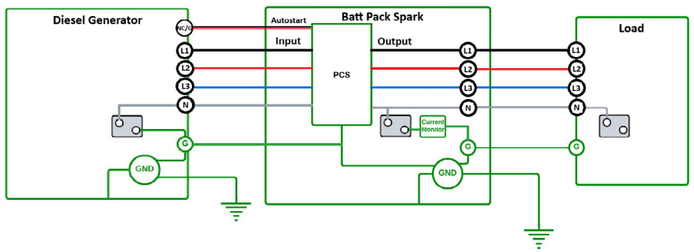

Standard set up with 208V 3-phase load described in Site Configuration 1

4.12.2. Site Configuration 2a

NOTICE

The following definition of terms is leveraged by NFPA in NFPA 70 and by Hybrid Power Solutions in reference to that standard. Please refer to these definitions used in this section.

Grounded Electrical Conductor

- The grounded conductor is a neutral conductor.
- The Grounded Electrical Conductor (GEC) is also referred to as "grounded conductor."

Equipment Ground Conductor (EGC)

- The EGC is a ground conductor with a direct ground connection.

The 208V 3-phase unit is connected to an external distribution unit or out-building with GEC and EGC not bonded.

- No special considerations needed.
- Connect L1, L2, L3, N, and Ground as normal.

When the unit is in 240 V operating mode (split phase), L3 in the figure below should be disconnected from the unit.

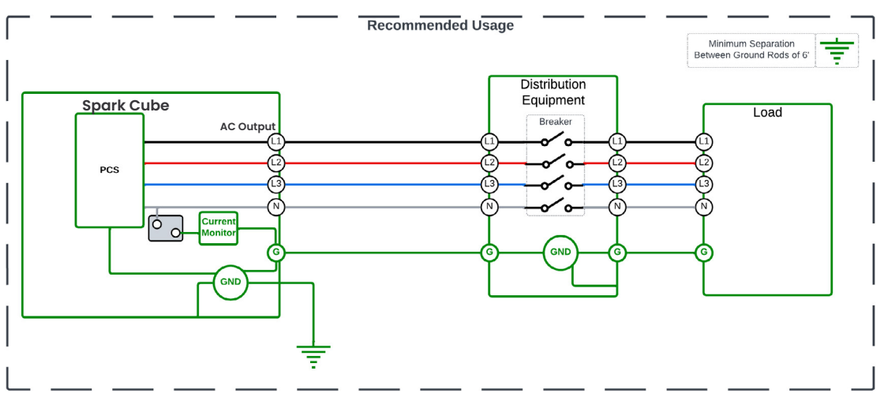

Recommended usage described in Site Configuration 2a

4.12.3. Site Configuration 2b

The unit is connected to an external distribution unit or out-building with the GEC and EGC bonded with a ground fault monitor.

- Equipment Ground Conductor (EGC) should not be connected to the distribution unit or out-building, assuming that the unit & distribution unit or out-building are both solidly grounded through unique grounding rods meeting the minimum NEC separation distance of 6 feet or greater. For more information, see the figure titled Non-recommended but permitted usage described in Site Configuration 2b.
- The site configuration is permitted to operate in this configuration under NFPA 70 Article 250 Section 250.32(B) Exception 1.
- This site configuration, regardless of source, is no longer permitted under NFPA 70/NEC for new installations.
- Hybrid Power Solutions units may be used to power installations designed in compliance to previous editions of NFPA 70/NEC if the following recommendations are adhered to.
- This site configuration is an implementation of 250.6(B)(3).

The site configuration must still meet 250.4(A)(5) or 250.4(B)(4).

Please refer to the General Requirements for Grounding and Bonding in Section 250.32(B)(1) in the National Electrical Code.

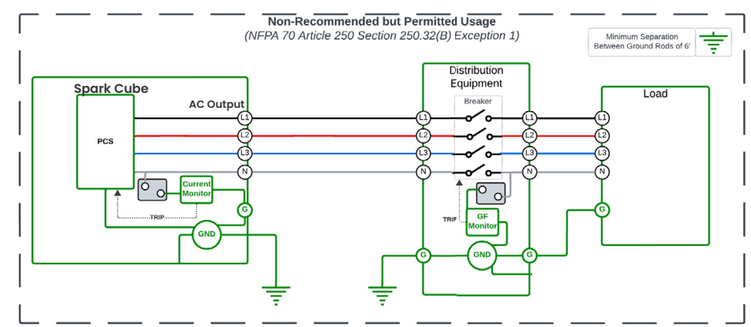

When the unit is in 240 V operating mode (split phase), L3 in the figure below should be disconnected from the unit.

Non-recommended but permitted usage described in Site Configuration 2b

4.12.4. Site Configuration 3a

The 208V 3-phase unit is connected to an external switchgear, 3-phase 4-wire 3-pole with a generator on the opposing side. The generator has a bonded EGC and GEC with the switchgear unbonded.

When the unit is in 240 V operating mode (split phase), L3 in the figure below should be disconnected from the unit.

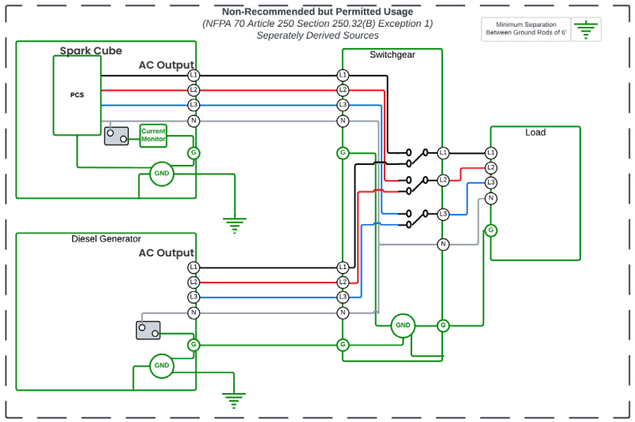

Non-recommended but permitted usage described in Site Configuration 3a

4.12.5. Site Configuration 3b

The 208V 3-phase unit is connected to an external switchgear, 3-phase 4-wire 3-pole with a generator on the opposing side. The generator and the switchgear both have EGC and GEC bonded as described in Site Configuration 2b.

When the unit is in 240V operating mode (split phase), L3 in the figure below should be disconnected from the unit.

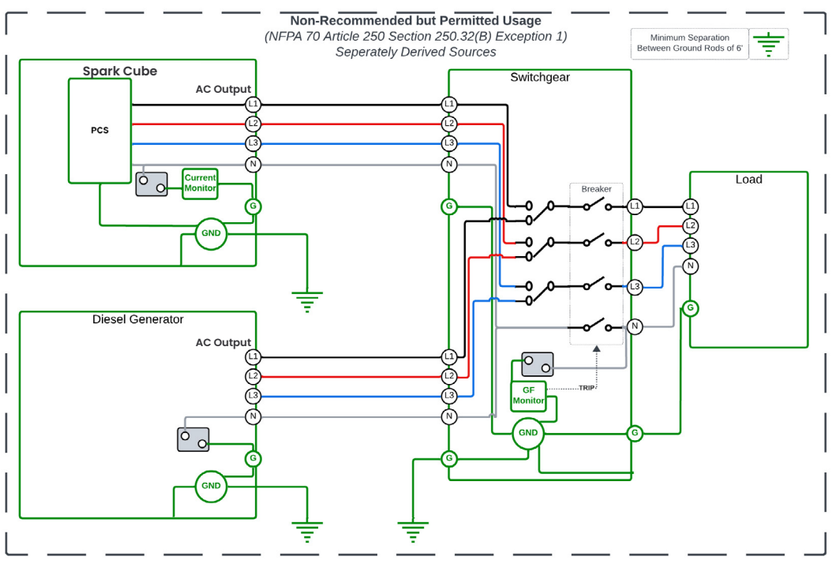

Non-recommended but permitted usage with separately derived sources described in Site Configuration 3b

4.12.6. Site Configuration 3c

The 208V 3-phase unit is connected to an external switchgear, 3-phase 4-wire 3-pole with a generator on the opposing side. With the GEC and EGC bonding plate in the generator removed, the EGC and GEC of the generator should be disconnected if permitted explicitly in the operating manual of the generator. If unbonding the GEC and EGC of the generator is not permitted, please refer to Site Configuration 3a.

When the unit is in 240 V operating mode (split phase), L3 in the figure below should be disconnected from the unit.

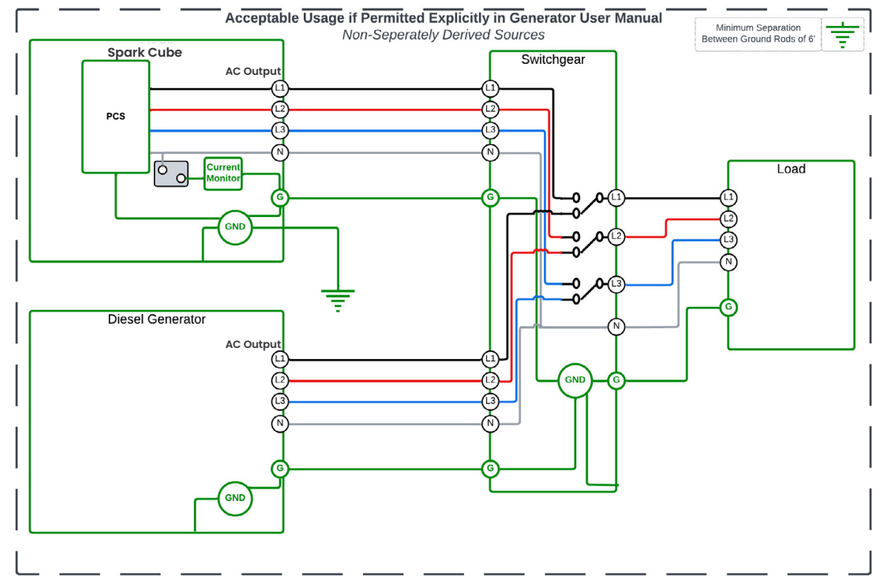

Example of acceptable usage if permitted explicitly in the generator manual described in Site Configuration 3c

4.12.7. Site Configuration 4

The unit is connected to an external switchgear, 3-phase 4-wire 3-pole with a generator on the opposing side.

- No special considerations needed.
- Connect L1, L2, L3, N, & Ground as normal.

When the unit is in 240 V operating mode (split phase), L3 in the figure below should be disconnected from the unit.

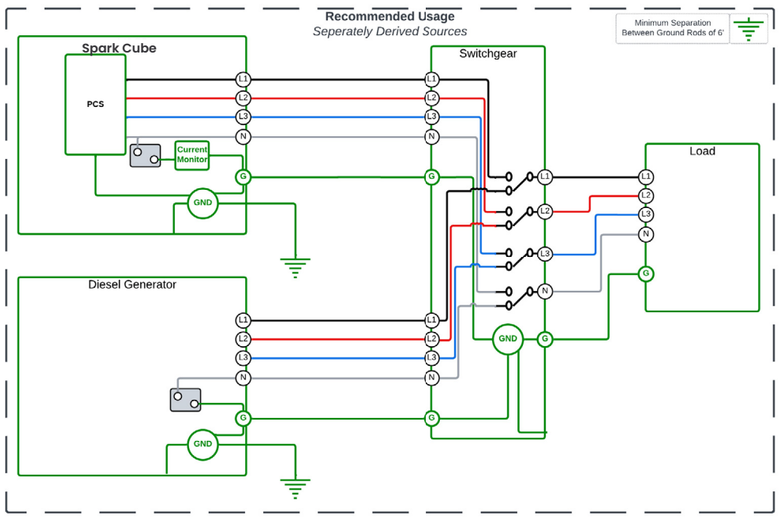

Example of recommended usage using separately derived sources described in Site Configuration 5.

4.12.8. Site Configuration 5

The unit is connected to a 3-phase 4-wire 4-pole external transfer switch. The generator is on the opposing side and the output of switchgear or distribution equipment is connected to the output of the switchgear as in **Site Configuration 2b**.

- Confirm that this connection case is permitted using the generator's manual.
- This site configuration permitted to operate in this configuration under NFPA 70 Article 250 Section 250.32(B) Exception 1.
- This site configuration, regardless of source, is not recommended by NFPA since the 2005 revision of NFPA70/NEC.
- HPS units may be used to power these legacy installations if the following recommendations are adhered to.
- This site configuration is an implementation of 250.6(B)(3).
- This site configuration must meet 250.4(A)(5) or 250.4(B)(4).

When the unit is in 240 V operating mode (split phase), L3 in the figure below should be disconnected from the unit.

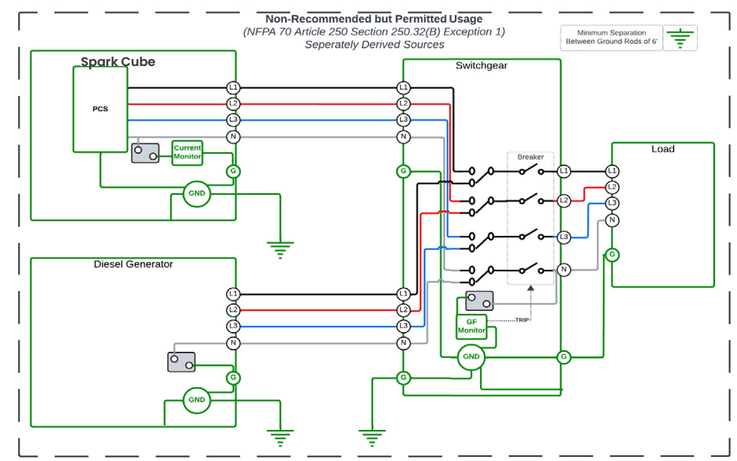

Example of non-recommended but permitted usage as described in Site Configuration 5

4.13. Service and Maintenance

It is important that you regularly service and maintain your unit.

WARNING

Risk of electrical shock!

Maintenance of internal electrical parts must be performed by professionals or trained electricians.

4.13.1. Daily Checks

Hybrid Power Solutions recommends the following tasks are done for the following situations:

- Check in or check out inspection
- New commissioning inspection
- Rent - Ready check-list inspection
- 14-day inspection
- Rental return inspection

Unit Check Tasks

Task	Check
No excessive dirt on the unit.	
No visible and external damages.	
All switches are functioning.	
Packaged components are collected.	
The unit can turn on.	
The unit is at least 20% charged.	
The unit is able to charge.	
The unit is able to discharge	

4.14. Long-Term Storage Checks

To store the unit for extended periods of time of 3 months or longer, follow these guidelines:

- Store the unit in a level and dry location protected from direct sunlight.
- Hybrid Power Solutions recommends you store the unit indoors, in a cool and dry location.
- The State of Charge (SoC), shown on the Control display, should be between 40 % and 50 % to preserve battery health and maximize battery life expectancy.

NOTICE

It is acceptable to keep the unit at up to 100 % SoC for periods less than three months.

4.15. Cleaning the Unit

To extend the life of the unit it should be cleaned regularly.

WARNING

Risk of damage!

Do not jet-wash directly onto the control board or onto the air-vents on the front and back of the unit.

4.16. Remote Access to the Unit

The unit's status can be monitored remotely.

Hybrid Power Solutions can access and monitor the following data of your unit:

- GPS location information
- Battery charge status
- Time until battery is depleted
- Temperature of the unit

4.17. Spare Parts

NOTICE

For a full list of replacement parts and spares, contact Hybrid Power Solutions.

MONITOR SYSTEM

Section 5

5.1. Setup the Monitor System

5.1.1. Download the “Lux Power Monitor” APP

You can download the Lux Power Monitor APP from the App Store or Google play by scanning the QR codes below.

Android APP

iOS APP

5.1.2. Sign up an account on the mobile phone APP or Website

When you register your account,you need to fill in the following information

a. Customer code/ installer code: it is the code of distributor or installer, please contact HPS to get the customer code

b. Datalog serial number: the serial number is attached to the wifi/LAN modules (dongles).

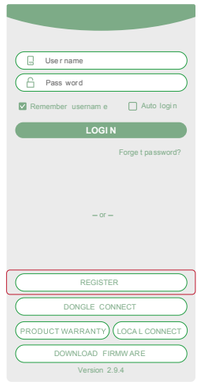

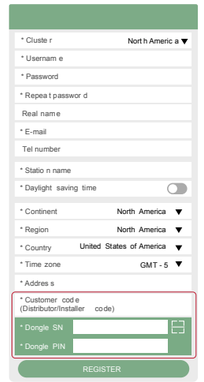

5.1.3. The station and wifi dongle will be automatically created when you register, if you need more stations to be created, you can create as shown below

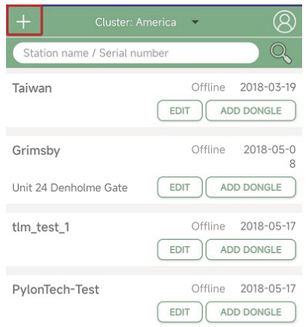

5.2. Set Homewifi Password to Dongle

Users can use APP or website to set home wifi password to wifi module, please follow 5.2.1 or 5.2.2 to set the password.

5.2.1. Use APP to Set WiFi Password

Step 1. Connect your mobile phone to the "BAxxxxxxxx" wireless network where "BAxxxxxxxx" is the serial number of the WiFi dongle installed inside the Spark Cube.

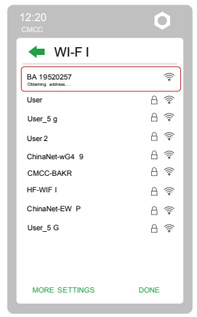

Step 2. Open the Lux Power Monitor app and Click the "DONGLE CONNECT" button on the app.

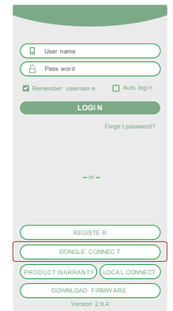

Step 3. Choose the WiFi network you want to connect in the Home WiFi, and input the password and then click "HomeWifi Connect". The WiFi dongle will restart and try to connect to our server automatically.

Step 4. Check the LEDs' status on the WiFi dongle. The middle light should be solidly lit when the WiFi dongle connects to our server successfully.

Step 5. Now you can disconnect your mobile phone from the "BAxxxxxxxx" wireless network. Login on the APP with your account, you'll find the inverter information already appears. Now you'll be able to monitor and control the inverter remotely on any smart phone or computer that has an Internet connection.

5.2 Lux Power Monitor for Local Monitor and Setting

Please review Section 3.16 to connect the SPARK to a WiFi, hotspot or LTE network. If there is no wifi signal at the station, users can use local function to monitor or set the system.

Step1. Download Lux Power Monitor APP

Step2. Connect your smartphone to the "BAxxxxxxxx" wireless network where "BAxxxxxxxx" is the serial number of the WiFi dongle installed inside the Spark Cube.

Step3. When your mobile phone is connected to the network, go back to the Lux Power Monitor App and click "Local Connect", then you can monitor and set the system.

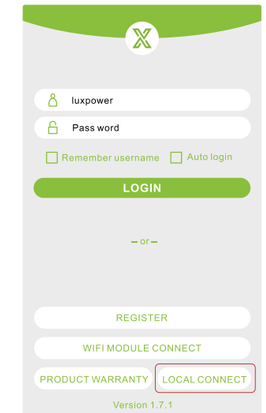

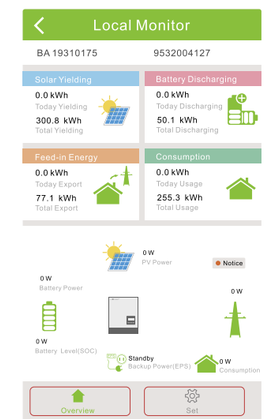

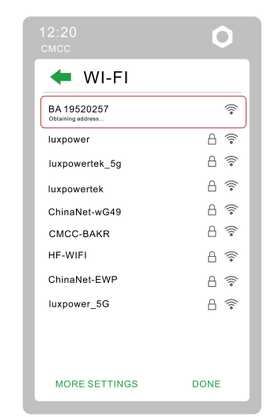

5.3. Operation Guide

5.3.1. Operation Mode and Function

The inverter has different working modes and functions to meet customers' various demands. The working modes and functions are as below.

5.3.2. Self-usage Mode (Default)

In this mode, the priority order of load supply sources is Solar>Battery>Grid/Generator. The priority order of solar power usage is Load>Battery>Grid.

Application Scenarios

Self consumption mode will increase the self consumption rate of solar power and reduce the energy bill significantly

Related Settings

Effective when Charge Priority , AC Charge, and Forced discharge are disabled

Example

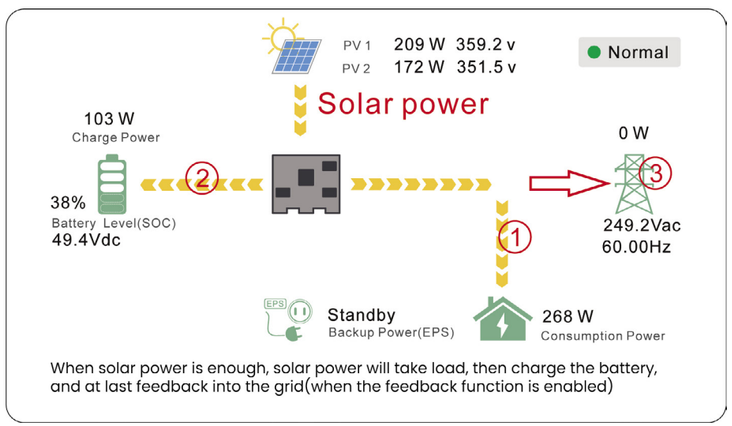

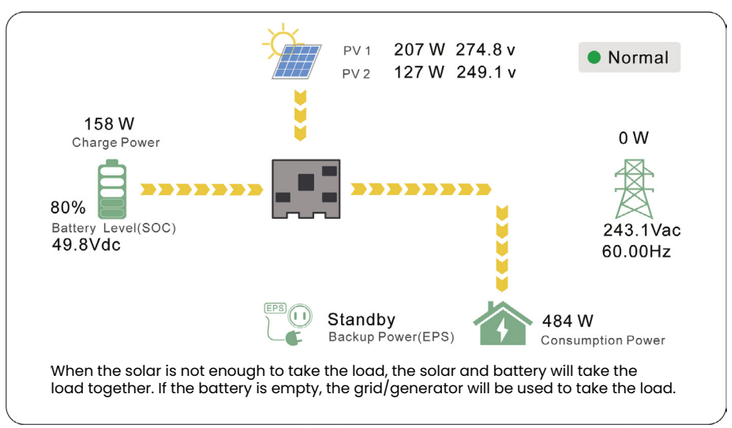

5.4. Common User Settings

The following are the common user settings that can be set based on the parameters mentioned above:

Bat Charge Current Limit

This allows for slower or faster charging and indicates the amperage at 50V. Therefore 50A will consume 2500W of power per battery (there are 2) for a total of 5000W. 5000W = 50V x 50A x 2 This settings should be changed based on generator size ensuring there is sufficient power for both charging and bypassing to load.

Off Grid Cut Off %

This is the percentage the inverter will turn off the main output. We recommend keeping 18% in reserve to ensure the pack is fully depleted but this can be set higher or lower depending on use case.

Charge Start SOC (%)

The battery percentage at which the generator will turn on if connected to the autostart plug located in the main panel of the Spark Cube should be higher than Off Grid Cut Off % to ensure proper functioning of the system.

Charge End SOC (%)

The battery percentage at which the generator will turn off if connected to the autostart plug located in the main panel of the Spark Cube.

SPARK CUBE WIRING GUIDE

Section 6

6.1. Solar Panel Guide

6.1.1 Spark Cube Solar panel specifications

	Spark Cube
Maximum total panel power	18,000W (36,000W optional)
Panel Voltage	120-500V DC
Recommended Wire Gauge	12AWG
Connector Type	MC4
Strings	3 strings (15A per string)

6.1.2. How to choose cable

Cable selection is based on required distance from panel to the unit. All 12AWG Solar Extension Cables with a MC4 connection are compatible with the Spark Cube.

Please minimize cable length to ensure minimal voltage drops.

6.1.3. How to choose your panel

When selecting your solar panels remember to choose solar panels that have specifications within the parameters mentioned above for the Spark Cube. If the voltage or current are higher or lower than the ones mentioned, the system will not work.

6.2 Combiner Box and Additional Solar Wiring

A properly rated combiner box with shut off mechanism should be used for long-term/permanent applications. Check local electrical requirements and certification requirements to ensure they meet the local electrical code.

Solar panel installation and associated wiring are highly dependent on both array design and local regulations. Seek the assistance of certified electricians and solar installers for exact installation requirements.

6.3 Wiring Guide

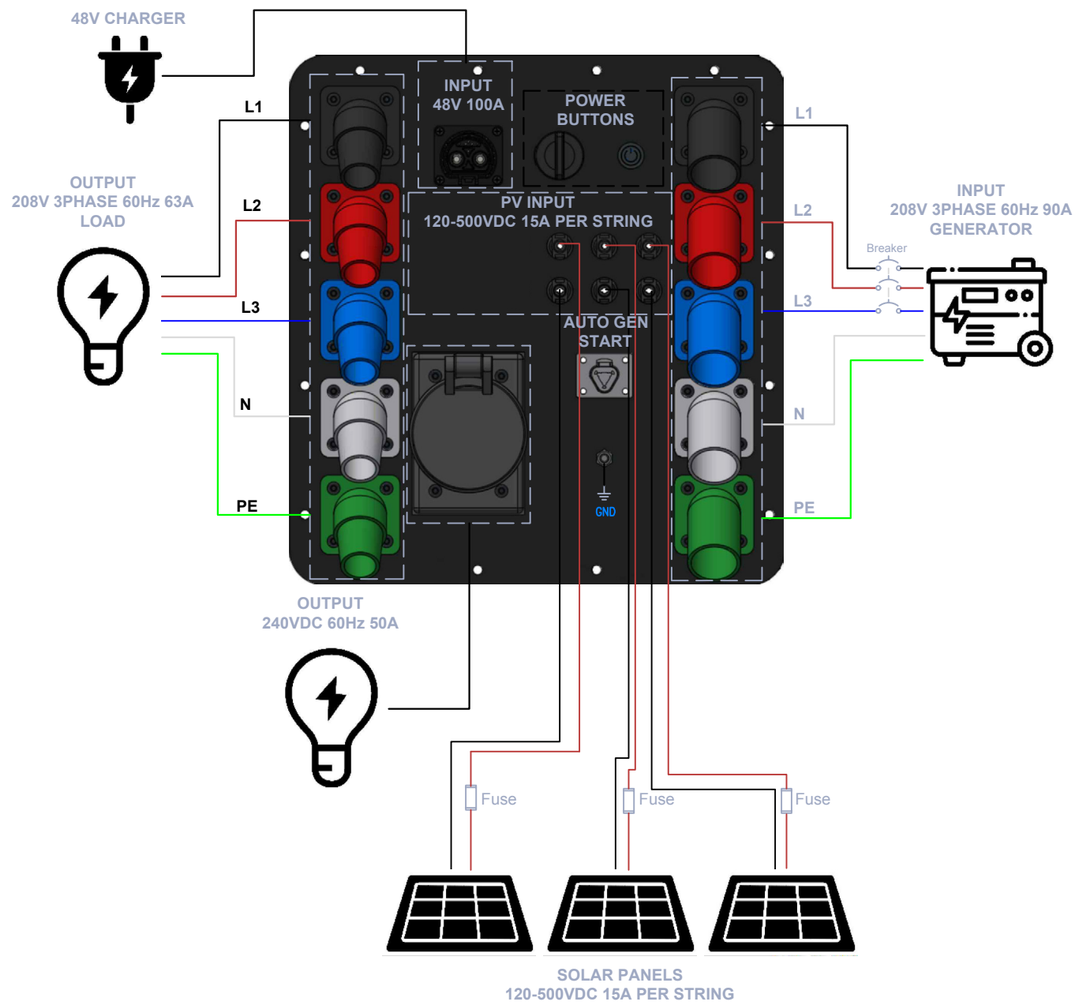

NOTICE

When the Spark Cube unit is configured as a 240V/120V Split-Phase 60Hz, the inputs and outputs must not have L3 connected.

The inputs and outputs specifications shown in the figure above may vary depending on the model.

Rotate page

6.3 Internal Wiring Diagram

This internal wiring of the Spark Cube corresponds to the 208V/120V 3-Phase configuration.

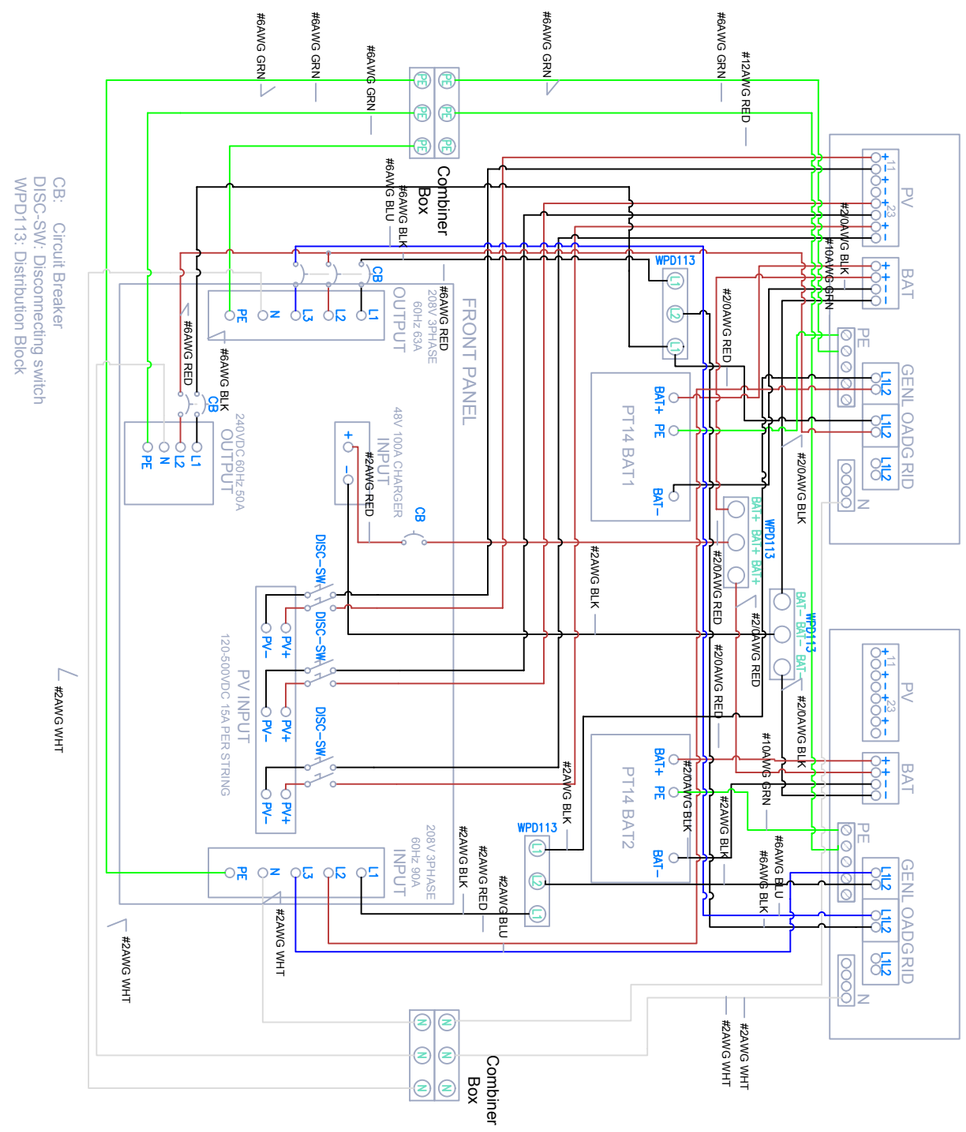

TROUBLESHOOT

Section 7

7.1. Problem and Solution Table

Problem	Solution
Charger plugged in but unit not turning ON	• Check to ensure power is live from extension cord • Turn on the START Key and hold it for 30 seconds in the Start position until the unit has turned on. Then, release on the ON position.
Spark Cube unit not turning ON	• Check if the emergency stop (e-stop) button is not pressed. If pressed, rotate clockwise the red surface, until it clicks and the black line below the red surface is visible. If problem persist, follow the steps below. • Connect a DC charger in the DC Input port of the unit. Then, turn ON the unit using the standard start procedure, but hold the on key in the START position for 30 seconds. If problems persist, please contact HPS immediately.
DC Charger plugged in, but Spark Cube unit not turning ON	• Check to ensure power is live from the extension cord and that the charger is turned ON. Then, turn ON the unit using the standard start procedure, but hold the on key in the START position for 30 seconds. If problems persist, please contact HPS immediately.
There is no output voltage in any of the ports	• Check if the e-stop button is not pressed. If pressed, rotate clockwise the red surface, until it clicks and the black line below the red surface is visible. • Check if the breakers inside the Breaker Box are in the ON position.
PV voltage high fault shown on the real time system information	• Turn OFF the Solar switch located inside the Breaker Box and disconnect all PV strings from the Spark Cube Main Panel. Check if the PV string voltage is within the Spark Cube specifications. If string voltage is within range, and this fault still appears, contact HPS.
PV short circuit fault shown on the real time system information	• Turn OFF the Solar switch located inside the Breaker Box and disconnect all PV strings from the Spark Cube Main Panel. Check to see if the wiring of the solar panels is correct. If everything is correct and the problem persists, please contact HPS immediately.
The colour of the battery symbol on the real time system information is yellow or red	• Please turn OFF the unit and restart. Then, check if the problem was solved. If the problem persists, contact HPS immediately.
The real time system information shows that the system is offline	• Ensure the dongles are connected to the WiFi network by following the steps on Section 5.2. • If problems persist, restart the Spark Cube unit. If after restart, the unit is still offline, contact HPS.
LED lights not turning on	• Check if the emergency stop (e-stop) button is not pressed. If pressed, rotate clockwise the red surface, until it clicks and the black line below the red surface is visible. • Connect a DC charger in the DC Input port of the unit. Then, turn ON the unit using the standard start procedure, but hold the on key in the START position for 30 seconds. If problems persist, please contact HPS immediately.
Off grid overload shown on the real time system information	• Check if load power on the Spark Cube is within the specifications and the system setting parameters. Please refer to section 5.3. Restart the unit and check if the fault persist.

Problem	Solution
Off grid overvoltage shown on the real time system information	• Restart the system, if faults persist, contact HPS immediately.

Note: If any of the problems above persists, or if you have any other issue with your Spark Cube, please contact HPS immediately.

LUX POWER MONITOR SYSTEM USER INTERFACE

Section 8

The purpose of this chapter is to introduce the User Interface (UI) of the Lux Power Monitoring System to Spark Cube users. The monitoring system may change due to updates, so if you find the following UI descriptions vary from the display, please contact us for assistance if you have any questions.

8.1. Monitor

"Monitor" view is for customers (end users) to easily check real-time system information (including Battery, Photo Voltaic (PV), Emergency Power Supply (EPS) and Grid data), with both daily and total figures for solar yielding, battery charging/discharging, feed-in energy and consumption.

8.1.1. Dashboard

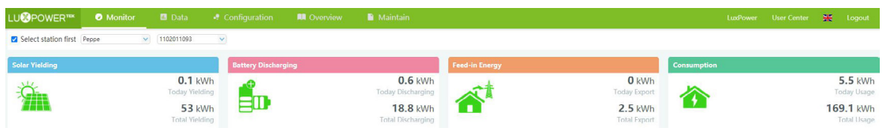

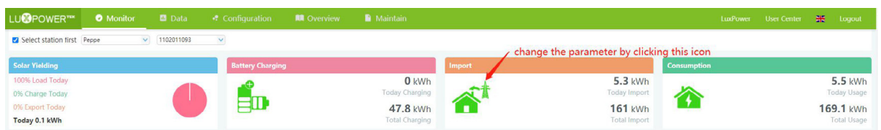

Solar Yielding: The data shows power generated by the solar panels. For AC coupled inverters it shows the power generated by the on grid inverter. To be able to show the data correctly the PV CT clamp for the AC ESS inverter will have to be installed. When the picture of the solar yielding is clicked or touched (on the LuxPower app), it will switch to portion display of how the solar energy has been used that day and a second click or touch shows the totals since commissioning. It shows the percentage portion of load supplied, charge of battery and export to grid.

Battery Discharging/Battery Charging: The data shows the charge and discharge energy from the battery/batteries. When the battery picture is clicked or touched the display will switch between battery discharging and battery charging, showing totals for that day and since commissioning.

Feed-in Energy/Import: It shows energy exported to grid for that day and since commissioning. When the picture is clicked or touched it shows energy imported from the grid for that day and since commissioning.

Consumption: The data shows the total energy consumption of the property for that day and since commissioning.

8.1.2. Real Time System Information

The picture shows the live energy data, with dynamic flows. When the battery image is clicked it will show battery charge and discharge limitation. When the battery's colour is yellow or red it means there is a warning or fault with the battery.

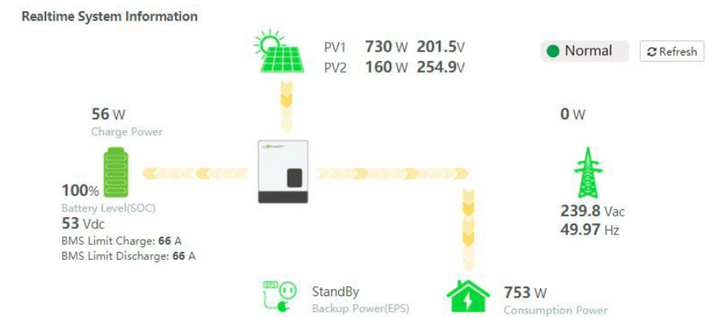

8.1.3. Input & Output Power(daily)

The picture shows the power curve for each day, including solar power, battery charge/discharge power and grid import/export power and consumption.

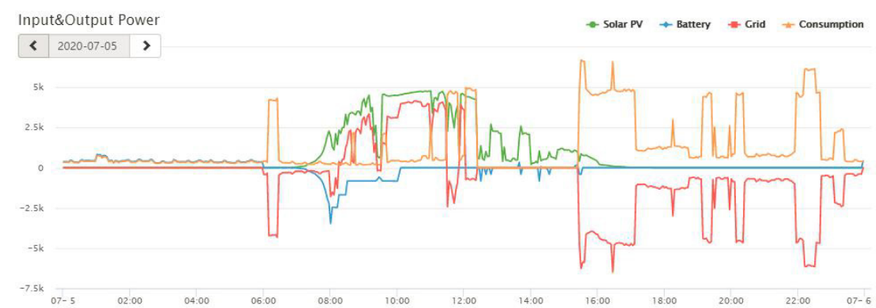

8.1.4. Energy Overview

With the 'Month' box highlighted the graph shows the energy statistics for each day. When the 'Year' icon is clicked or touched it will show energy for each month and when the 'Total' icon is clicked or touched it will show energy for each year.

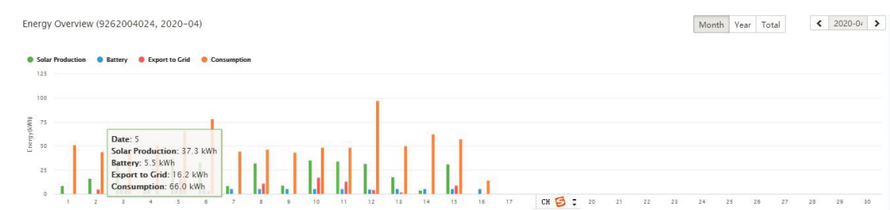

8.2. Data

"Data" view shows more detailed running data, which helps for analysis and maintenance, including detailed technical parameters of PV, battery, grid and EPS.

"Data" view consists of five sections: "Chart", "Energy", "History data", "Local data" and "History event". Please see below for more information on each section.

8.2.1. Chart

Chart shows how key parameters of **"PV side"**, **"Battery"** ,**"AC Side"** and **"EPS"**change along with time over a 24 hours period.

Below is the meaning of each parameter abbreviation with the Luxpower naming rule clarified.

Vpv: Voltage of solar input (first letter "V" stands for Voltage,lower-case letter "pv" stands for PV)

Ppv: Power of solar input (first letter "P" stands for power, lower-case letter "pv" stands for PV)

SOC(%): Battery/batteries - State of charge.

vBat: Battery/batteries voltage.

Vacr: Voltage of AC output ("V" stands for voltage, "ac": AC, "r": phase R)

Qac: Reactive power of AC output ("Q" stands for reactive power)

Vepsr: Rated voltage of EPS(Emergency Power Supply)

pToGrid: power feed in to grid

Feps: Frequency of EPS

Peps: Output power of EPS

Seps: Apparent power of EPS (first letter "S" stands for apparent power)

8.2.2. Energy

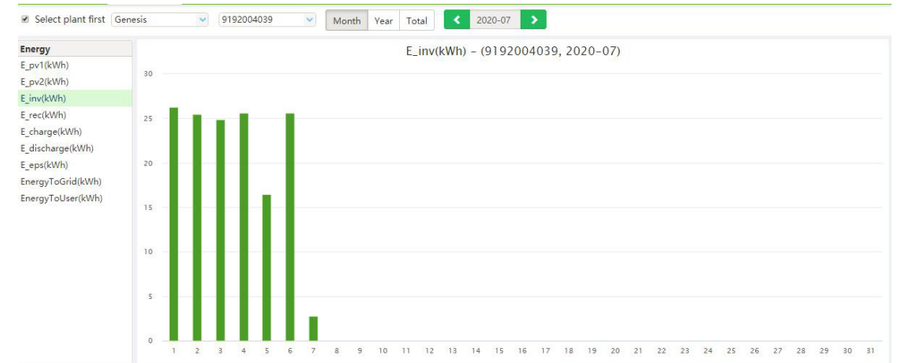

"Energy" section: above various bar charts show how energy (y-axis) changes with time, daily, by date (x-axis) in one month.

E_pv1(kWh): Energy generated by PV string1

E_pv2(kWh): Energy generated by PV string2

E_inv(kWh): Energy output via AC output

E_rec(kWh): Energy of AC charge

E_charge(kWh): Energy used for battery charge

E_discharge(kWh): Energy output by battery discharging

E_eps(kWh): Energy output via EPS

EnergyToGrid(kWh): Feed-in energy

EnergyToUser(kWh): Energy import from grid

8.2.3. History Data

The "History data" section are the measured technical parameters of PV, battery, EPS and Grid, mainly for Luxpower or its distributor's analysis to quickly address problems that may have occurred.

It is considered that professional, technical knowledge is required to fully understand this table. It is suggested that end users focus on the "Monitor" section, "Chart" section and "Energy" sections only, as these provide easy to understand performance data.

It is suggested that Luxpower distributors should focus on the key parameters below to carry out rapid troubleshooting for their end users:

1. PtoGrid/PtoUser (to check if CT was connected correctly)

2. Vpv/Ppv (to check the MPPT)

3. Vo/Po/So (to check load type and if there is an overload when in EPS mode)

4. Vb/SOC (to check current state of charge and if battery is over charged or discharged)

5. Vac/Fac (to evaluate Grid performance and to check if working voltage and frequency range is adjusted to comply with Grid)

6. E-xxday (to evaluate energy distribution), Exxall (to check if the system is working well under off grid mode)

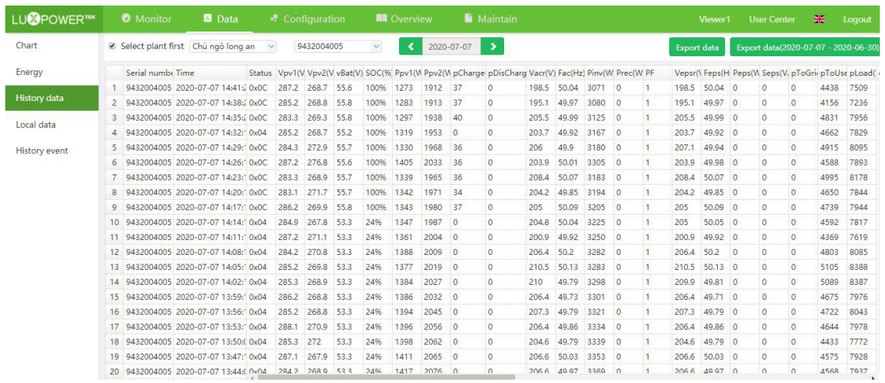

8.2.4. Local Data

"Local data" section shows the data recorded during offline period(s) (loss of Internet or Wi-Fi). It is the same as history data with only the difference being it is for offline data recording.

Note: the local data is captured every 5 minutes and would be recorded when the system is offline for more than 20 minutes. The system can record data for 90 days maximum.

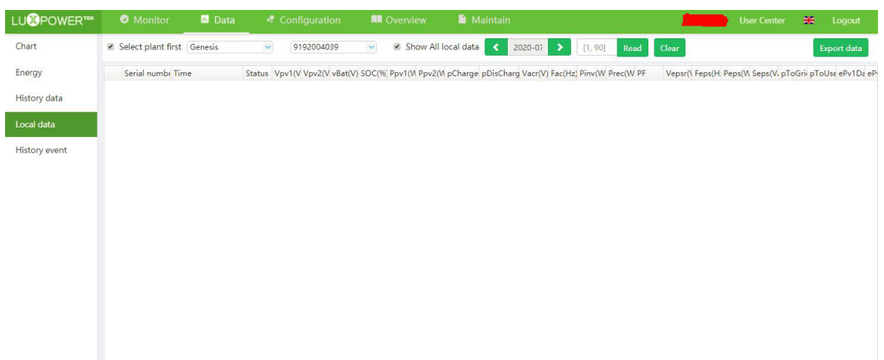

8.2.5. History Event

"History event" section show a historical records of events. (Event types: Notice and Fault) If there is no "history event" record it means the hybrid inverter is well connected and operating without any problem.

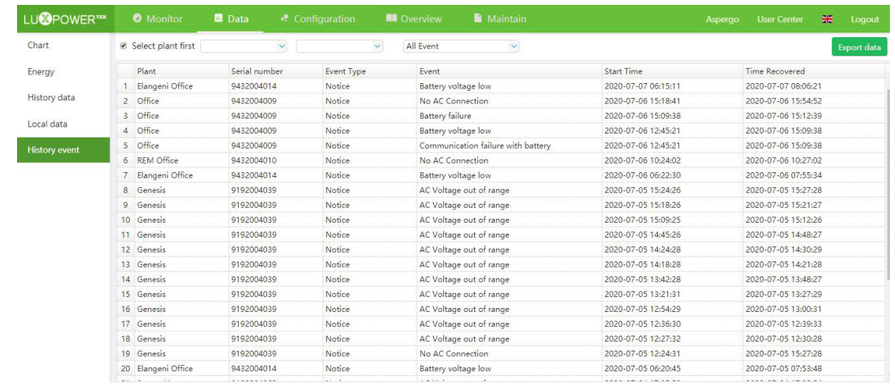

8.3. Configuration

"Configuration" page is used for users to manage their station, datalog and user information.

8.3.1. Stations

It is used to create another site if you have more than one property with the system installed.

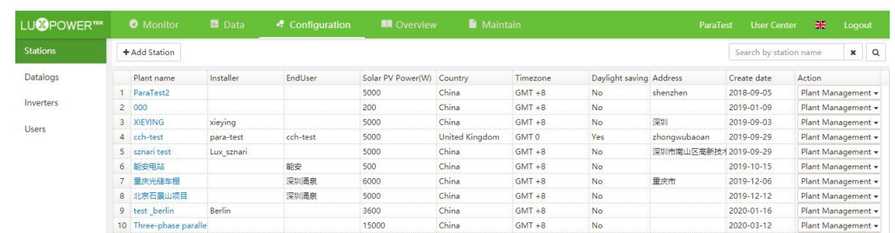

8.3.2. Datalogs

If users have more than one datalog in the system, they can add the datalog Serial Number (SN) in the station. After adding the datalog on the system and setting the correct password for the wifi data log, the inverter will be showed on the system automatically when powered on. **Note: Please add the datalog in the monitor system before setting the password for the wifi datalog.**

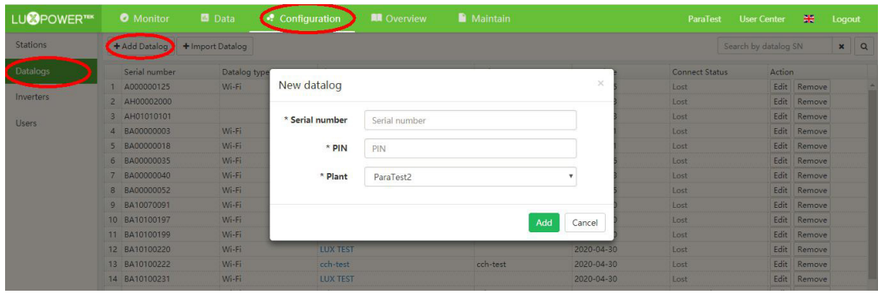

8.3.3. Inverters

End users can see the inverter list and check if the inverter is online.

8.3.4. Users

End users can edit password and personal information in the user page. Distributors can add an installer account and end user account on this page.

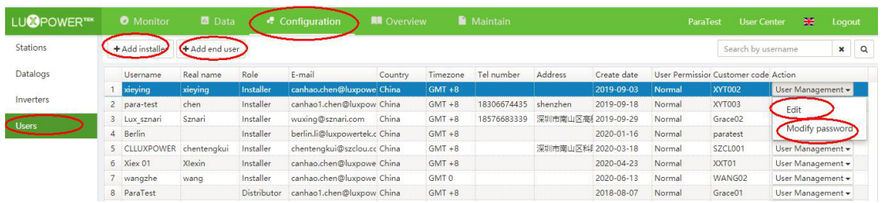

8.4. Overview

"Overview" is **for Luxpower or its distributor** to easily check overall system information for their end users, including solar yielding, battery discharging, etc.

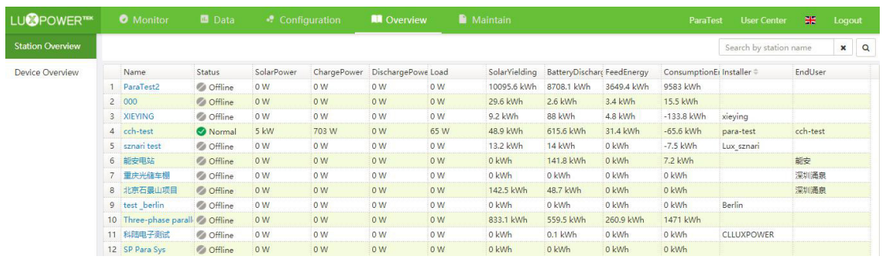

8.5. Maintain

8.5.1. Remote Set

"Maintain" view is for remote setting & upgrade. For more instructions about remote setting, please refer to "Website Setting Guidance" file.

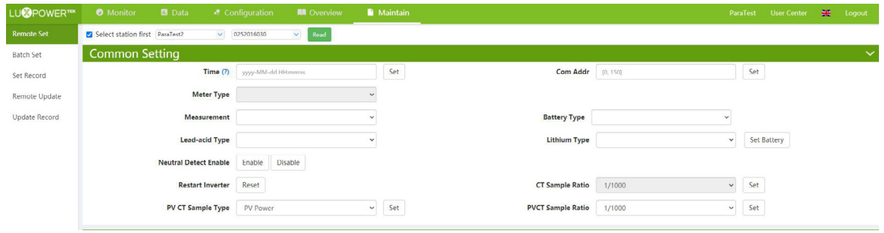

8.5.2. Batch Set

Luxpower monitor system also support batch setting function for distributors, so distributor can handle all settings for all inverters at one time. Please refer to "Website Setting Guidance" for batch setting function.

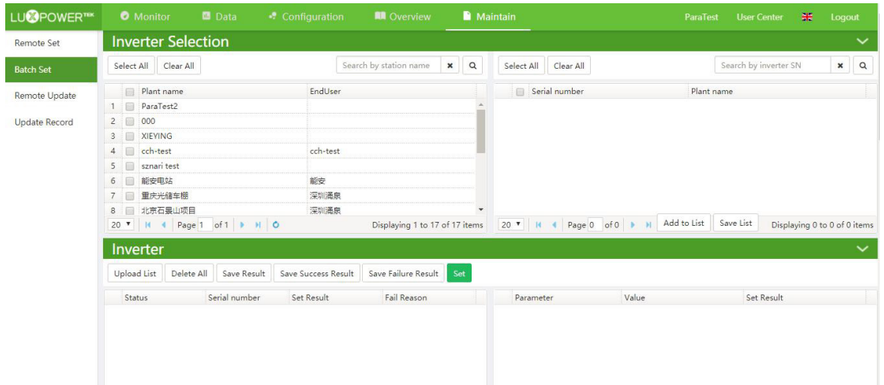

8.5.3. Set Record

Settings changed by the APP or Web remotely will be recorded, so the distributor can know if the end users change the configuration of the inverters frequently. Also, it helpful to check if the changes of configuration take effect in time.
[Notice: Recorded time base on GMT +8]

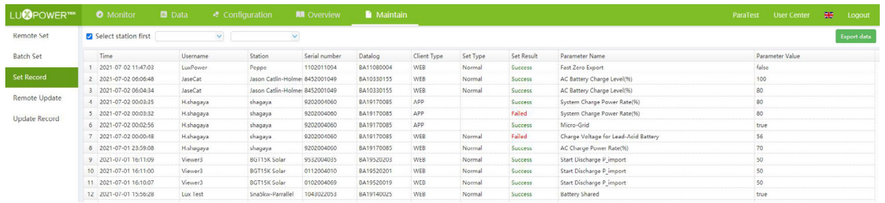

8.5.4. Remote Update

Luxpower monitor system supports firmware update function for distributor account, so distributor can update the inverters remotely if necessary.

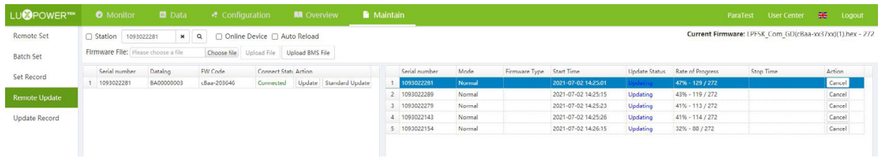

WARRANTY

Section 9

9.1. Manufacturer's Warranty Coverage

All Batt Packs supplied by Hybrid Power Solutions are tested for reliability and performance before delivery for correct function and condition.

We grant no warranty or liability for defects and losses that occurs during the use by the customer.

Please refer to this user manual to ensure proper user operation and operating conditions, which will ultimately prolong the life of the unit. The warranty does not cover negligence to this manual's directions.

Hybrid Power Solutions (HPS) warrants its products against defects in material and workmanship. Under normal use and service, every hardware portion of the product will be free from physical defects in material and workmanship during the warranty period, or the product will be repaired or replaced as determined solely by HPS. HPS provides a limited warranty for its products only to the person or entity that originally purchased the product from HPS or its authorized distributor or retailer.

9.2. Owner's Warranty Responsibility

If the product does not operate as warranted above during the applicable warranty period, HPS shall, at its option and expense (except for shipping cost), repair the defective product or part, deliver to the customer an equivalent product or part to replace the defective item. All products that are replaced will become the property of HPS. Replacement products may be new or reconditioned as determined by state of the original unit.

Commercial warranty period (unless otherwise contracted) is six (6) months.

Standard warranty period (unless otherwise contracted) is 30 months.

9.3. Exclusions

Warranty does not apply, if

- The warranty period is expired,
- The warranty label is broken or removed,
- The serial number label is missing or unrecognizable,
- The product has been modified, opened or repaired by any unauthorized service center or personnel,
- The defect was subject to abuse, improper use not conforming to product manual instructions, or environment conditions more severe than those specified in the manual operating condition
  and user operation.
- The G Shock sticker has been triggered. (50G)
- The water tape indicator has been triggered.
- Low voltage incident.

9.4 Recycling

Please return the product to HPS for safe recycling. If the battery within the system is suspected to be damaged, please recycle at the closest electronics recycling facility.

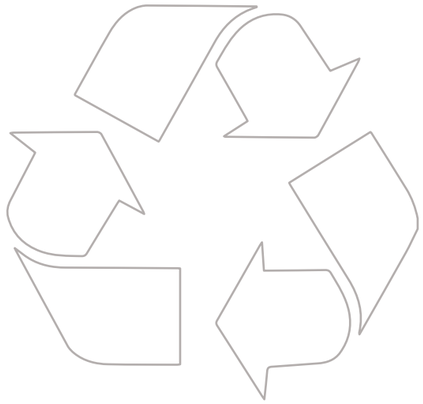

SPARK

12kW | 24kW CUBE

HYBRID POWER SOLUTIONS

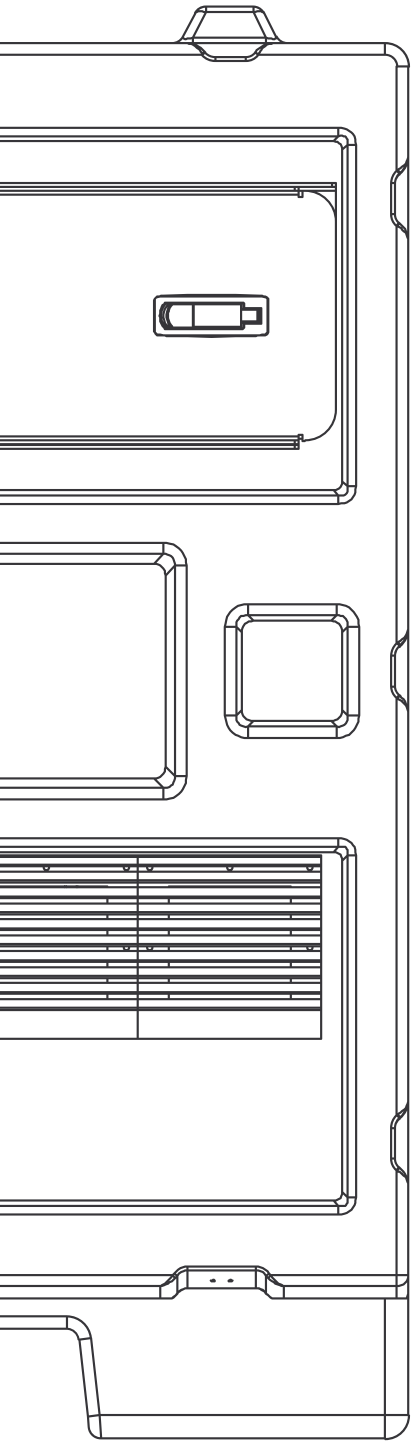

SPARK

12kW | 24kW CUBE

HYBRID POWER

User Manual