MNEVO2012E, 3012E or 4024E-CL250-REVA 11-22-16

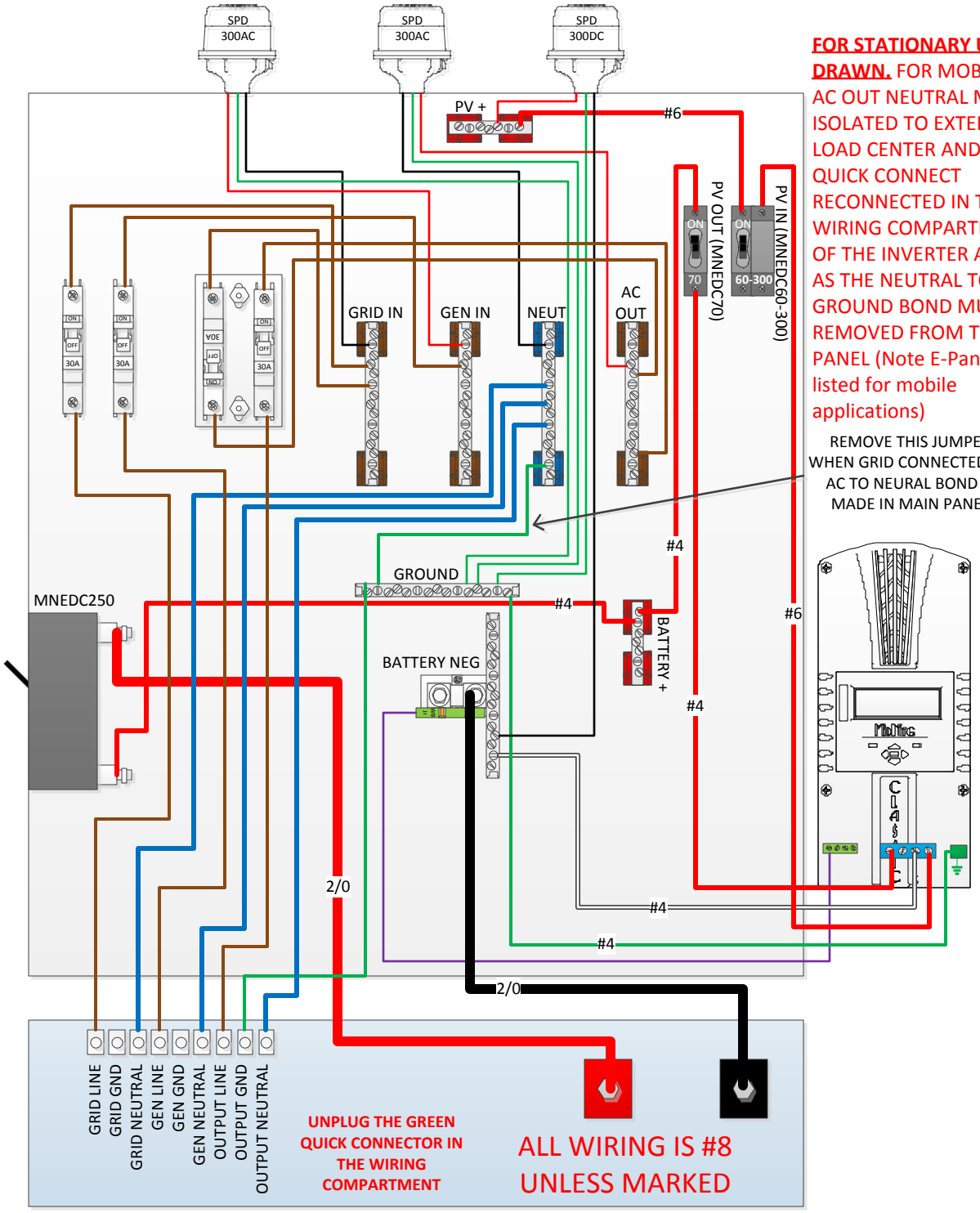

FOR STATIONARY USE AS DRAWN. FOR MOBILE USE AC OUT NEUTRAL MUST BE ISOLATED TO EXTERNAL LOAD CENTER AND GREEN QUICK CONNECT RECONNECTED IN THE WIRING COMPARTMENT OF THE INVERTER AS WELL AS THE NEUTRAL TO GROUND BOND MUST BE REMOVED FROM THE E-PANEL (Note E-Panel is not listed for mobile applications)