MNEMS4024or4448PAED-ACCPL
RevE – 10/30/2017

MAGNUM MS4024 or 4448PAE DUAL AC COUPLED INVERTERS

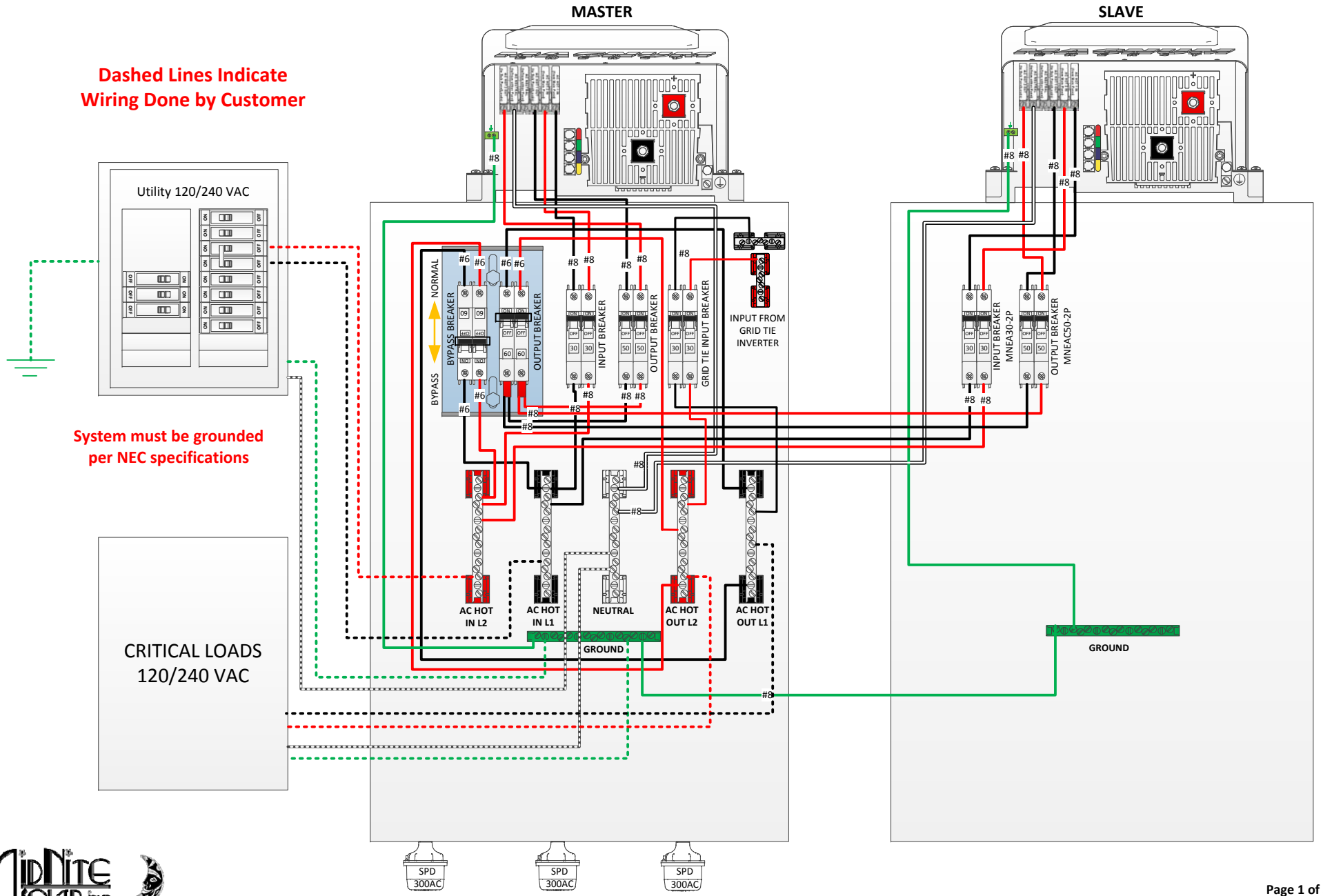

MNEMS4024or4448PAED-ACCPL
RevE – 10/30/2017

DC Wiring Done by MidNite Solar

Dashed Lines Indicate Field Wiring Done by Customer

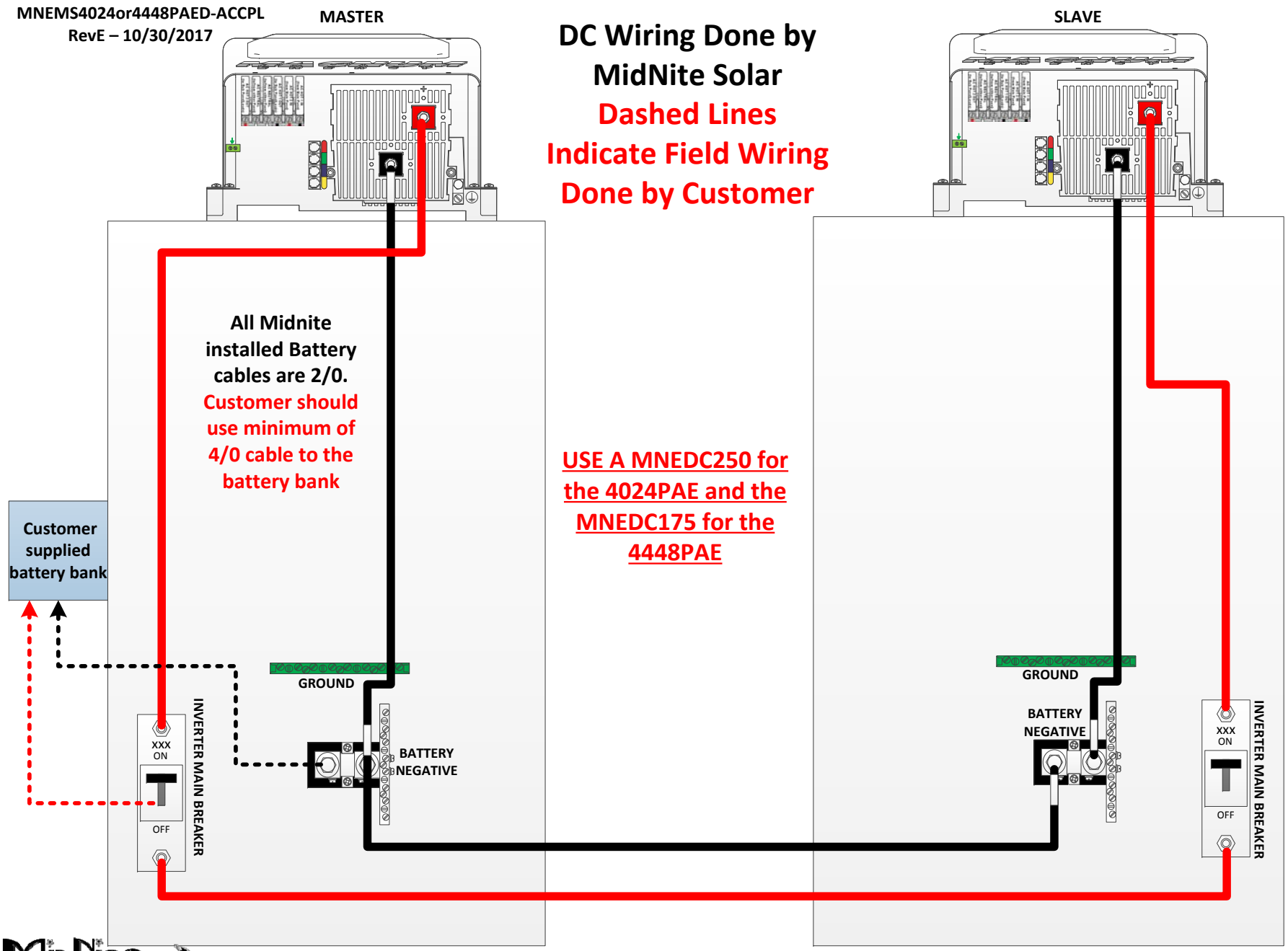

USE A MNEDC250 for the 4024PAE and the MNEDC175 for the 4448PAE

MNEMS4024or4448PAED-ACCPL
RevE – 10/30/2017
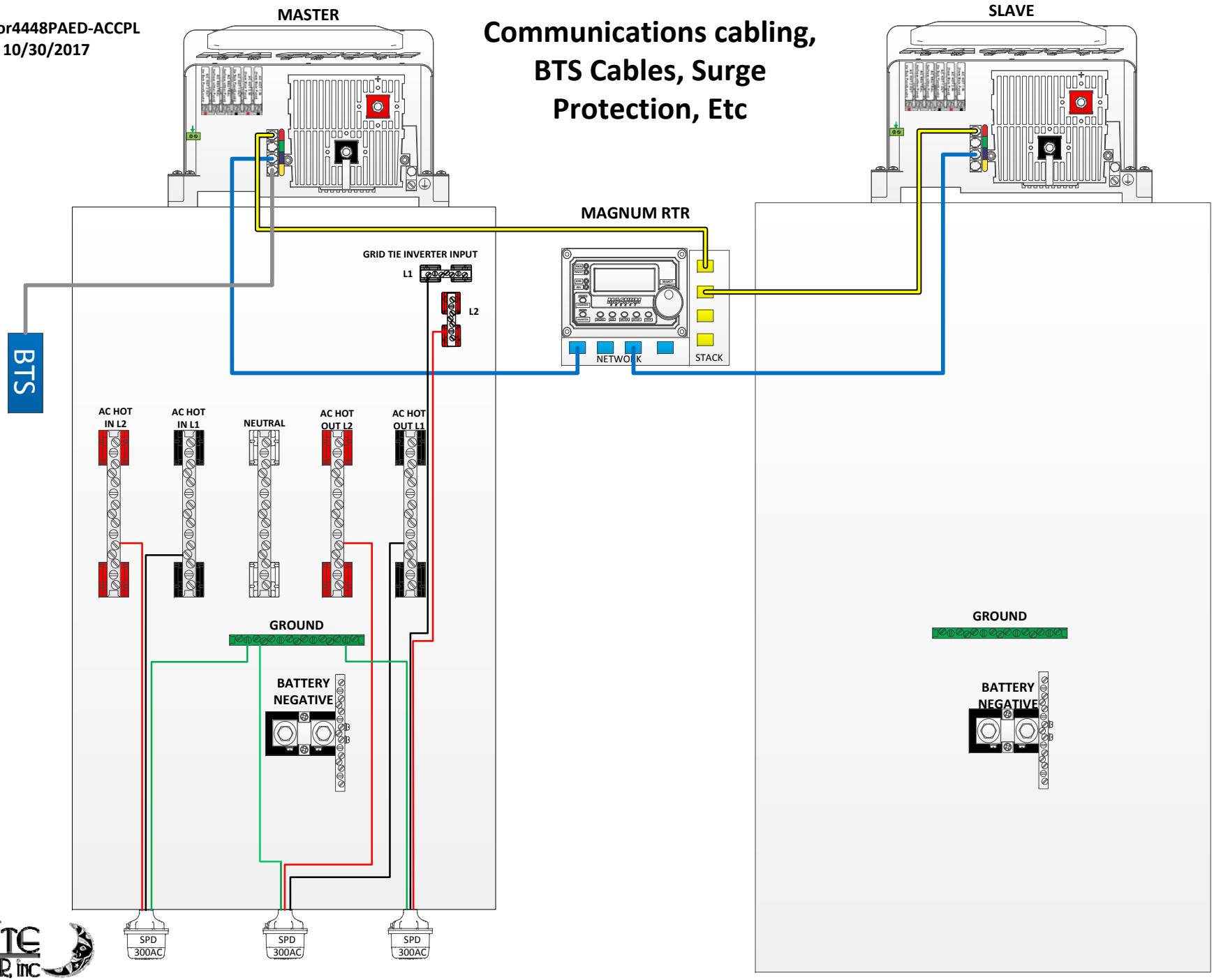
Communications cabling, BTS Cables, Surge Protection, Etc