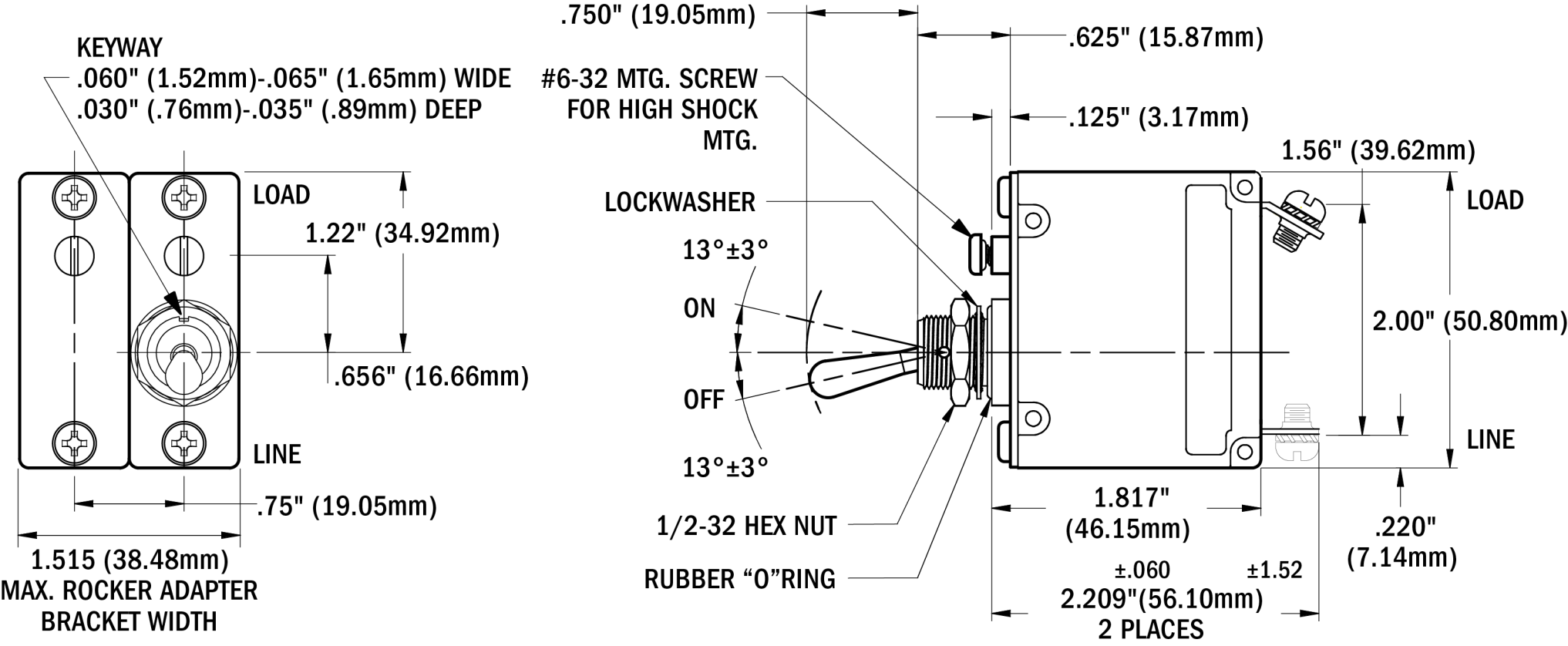
KEYWAY
.060" (1.52mm)-.065" (1.65mm) WIDE
.030" (.76mm)-.035" (.89mm) DEEP
LOAD
1.22" (34.92mm)
.656" (16.66mm)
LINE
.75" (19.05mm)
1.515 (38.48mm)
MAX. ROCKER ADAPTER
BRACKET WIDTH
.750" (19.05mm)
.625" (15.87mm)
#6-32 MTG. SCREW
FOR HIGH SHOCK
MTG.
.125" (3.17mm)
1.56" (39.62mm)
LOCKWASHER
LOAD
13°±3°
ON
2.00" (50.80mm)
OFF
LINE
13°±3°
1.817"
(46.15mm)
.220"
(7.14mm)
1/2-32 HEX NUT
RUBBER "O"RING
±.060
±1.52
2.209"(56.10mm)
2 PLACES